Curs 5

2017/2018

Dispozitive şi circuite de microunde pentru radiocomunicații

Documentatie

- RF-OPTO
  - **http://rf-opto.etti.tuiasi.ro**
- Fotografie
  - de trimis prin email: **rdamian@etti.tuiasi.ro**
  - necesara la laborator/curs

Fotografii

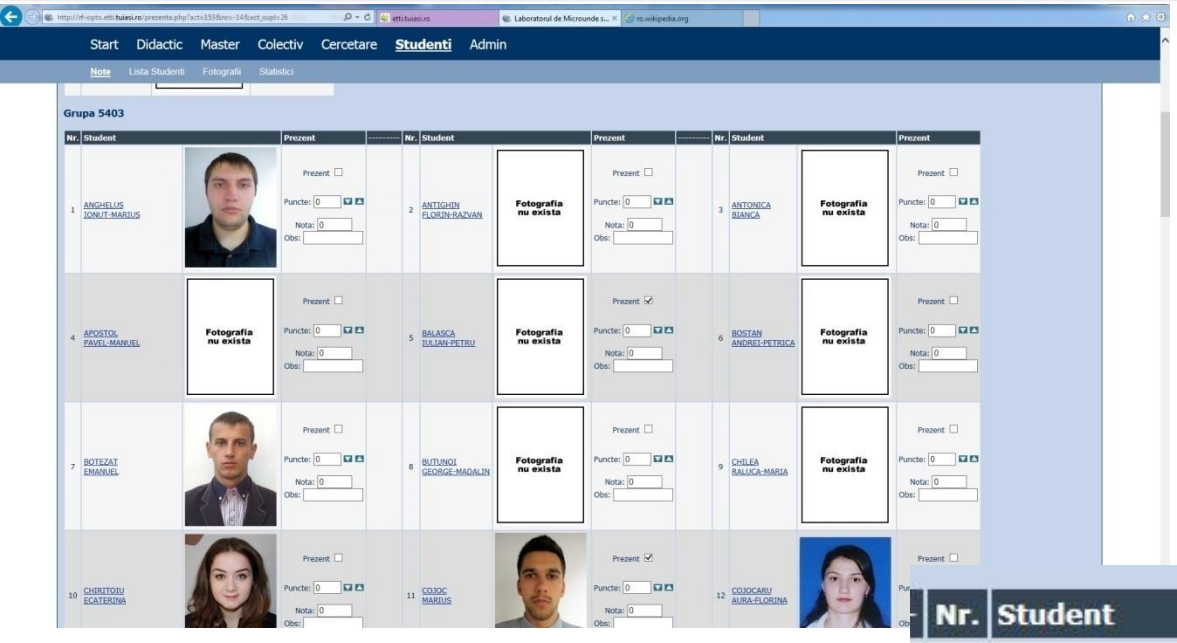
Start Didactic Master Colectiv Cercetare Studenti Admin
Note Lista Studenti Fotografii Statistici
Grupa 5403
Nr. Student Prezent
Fotografia nu exista
Prezent
Puncte: 0
Nota: 0
Obs:

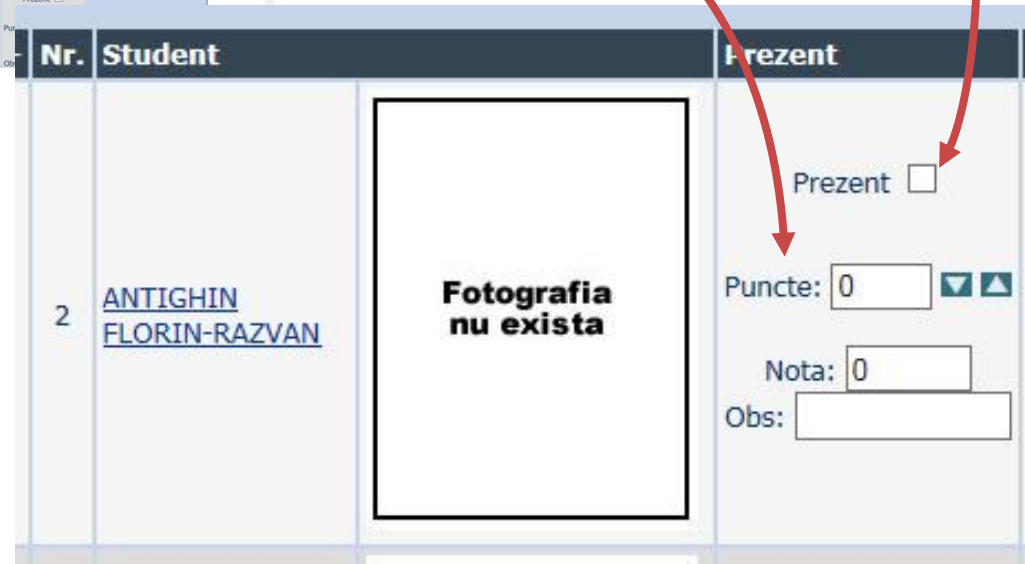
Nr.
Student
Prezent
2
ANTIGHIN FLORIN-RAZVAN
Fotografia nu exista
Prezent
Puncte: 0
Nota: 0
Obs:

Acces

- ~~Personalizat~~

Date:

Grupa	5304 (2015/2016)
Specializarea	Tehnologii si sisteme de telecomunicatii
Marca	5184

Acceseaza ca acest student

Note obtinute

Disciplina	Tip	Data	Descriere	Nota	Puncte	Obs.
TW	Tehnologii Web					
	N	17/01/2014	Nota finala	10	-	
	A	17/01/2014	Colocviu Tehnologii Web 2013/2014	10	7.55	
	B	17/01/2014	Laborator Tehnologii Web 2013/2014	9	-	
	D	17/01/2014	Tema Tehnologii Web 2013/2014	9	-	

Nume

[redacted]

Email

Cod de verificare

344bd9f

Trimite

Software

- ADS 2016
- EmPro 2015
- pe baza de IP din exterior

Date:

Grupa	5601 (2017/2018)
Specializarea	Master Retele de Comunicatii
Marca	857

Acceseaza ca acest student | Cere acces la licente

Note obtinute

Disciplina	Tip	Data	Descriere	Nota	Puncte	Obs.
TMPAW	Tehnici moderne de proiectare a aplicatiilor web					
	N	29/05/2017	Nota finala	10	-	

Software

Advanced Design System
Premier High-Frequency and High Speed Design Platform
2016.01
KEYSIGHT TECHNOLOGIES
© Keysight Technologies 1985-2016

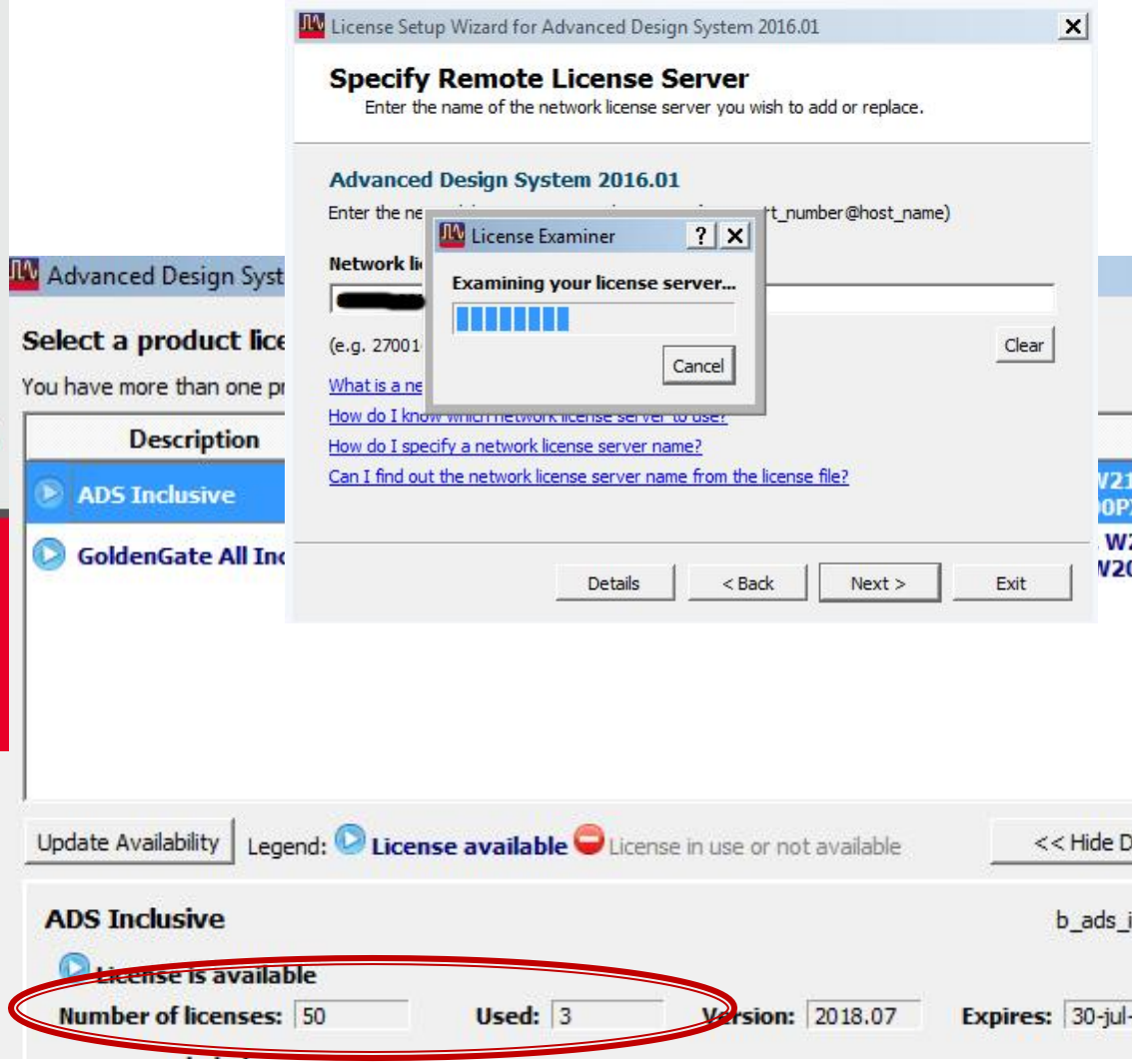
License Setup Wizard for Advanced Design System 2016.01
Specify Remote License Server
Enter the name of the network license server you wish to add or replace.
Advanced Design System 2016.01
License Examiner
Examining your license server...
Cancel
Clear
How do I specify a network license server name?
Can I find out the network license server name from the license file?
Details
< Back
Next >
Exit
Advanced Design Syst
Select a product lice
You have more than one pr
Description
ADS Inclusive
GoldenGate All Inc
Update Availability
Legend:
License available
License in use or not available
<< Hide D
ADS Inclusive
License is available
Number of licenses: 50
Used: 3
Version: 2018.07
Expires: 30-jul-

Adaptare

- Generator **adaptat** la sarcina ?

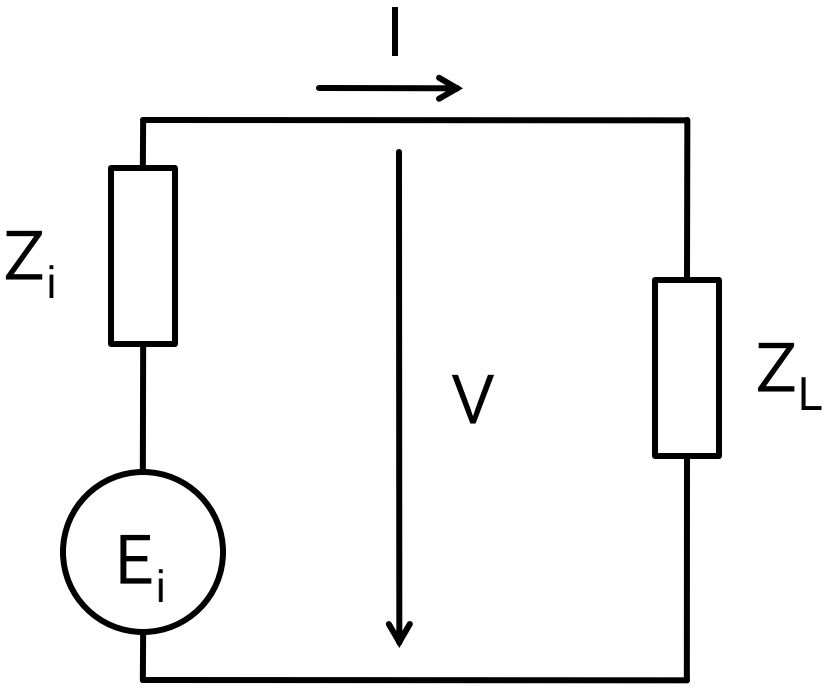

- valori impedanta ?
- reflexii ?

Adaptare, exemplu

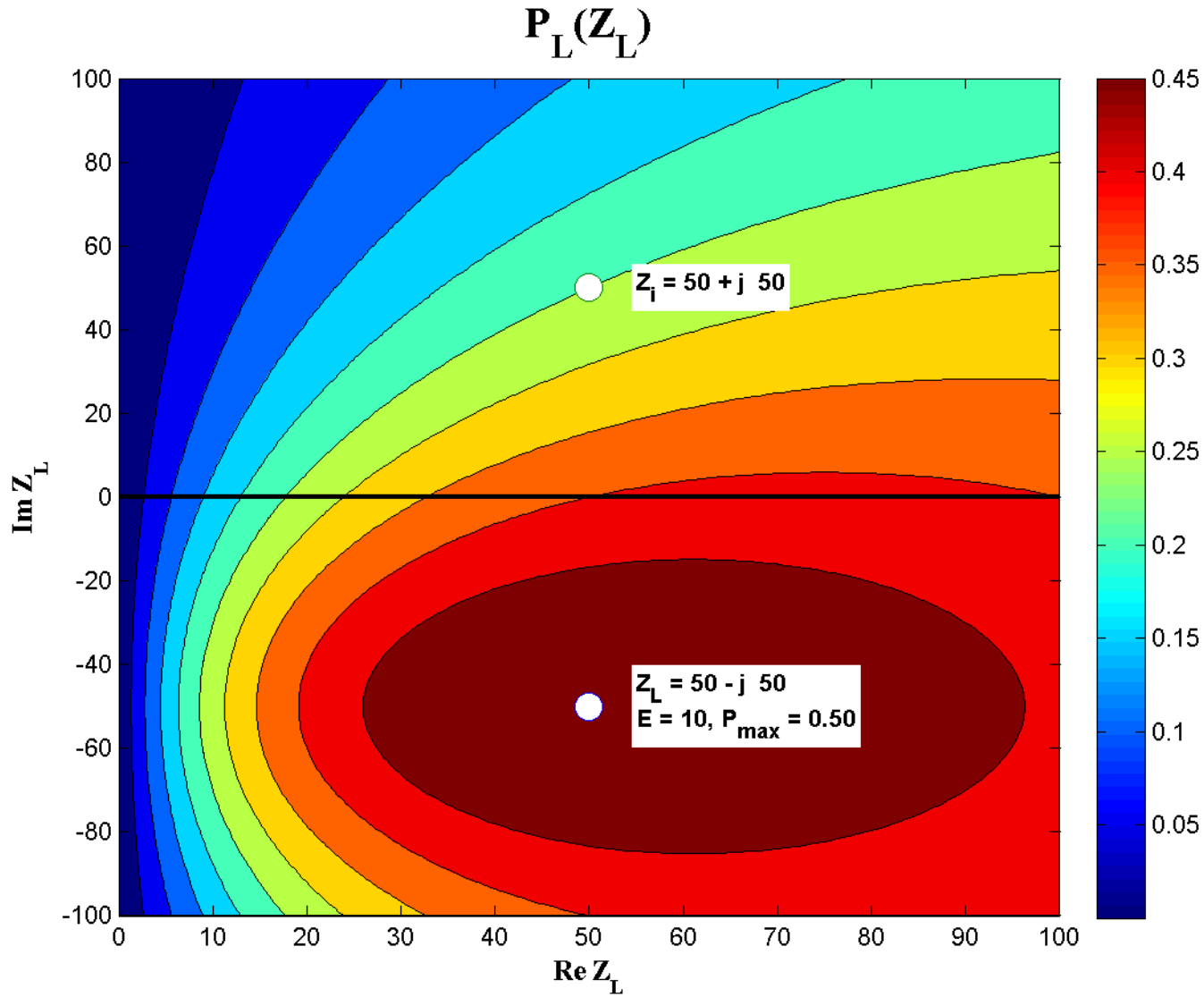

$$Z_L = Z_i^*$$

$$\Gamma_L = \Gamma_i^*$$

Reflexie de putere / Model

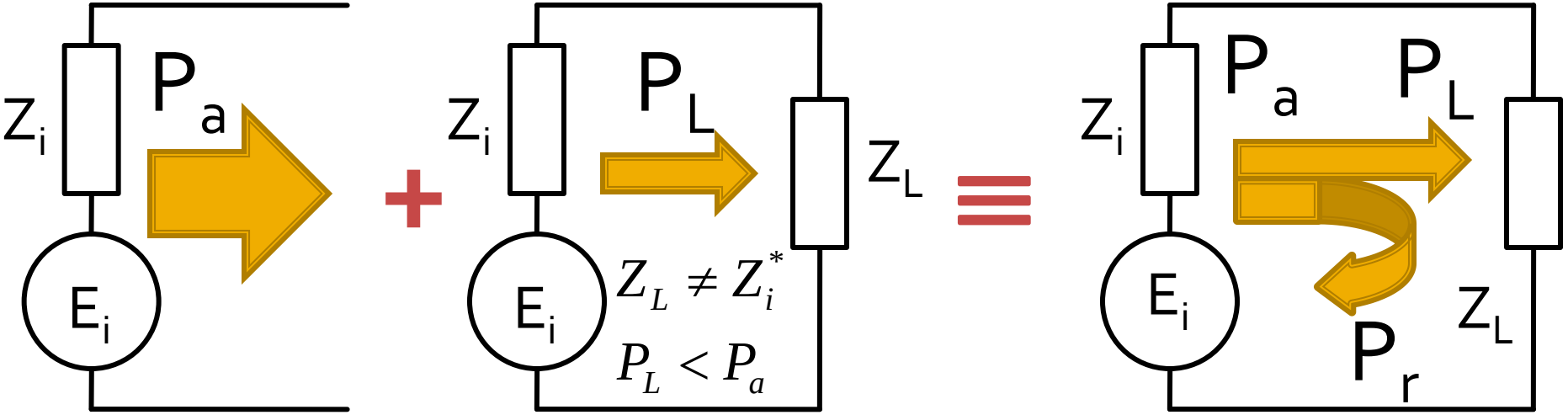

- Generatorul are posibilitatea de a oferi o anumita putere maxima de semnal P_a
- Pentru o sarcina oarecare, acesteia i se ofera o putere de semnal mai mica $P_L < P_a$
- Se intampla **"ca si cum"** (model) o parte din putere se reflecta $P_r = P_a - P_L$
- Puterea este o marime **scalara!**

Linii de transmisie in mod TEM

Linie fara pierderi

- impedanta la intrarea liniei de impedanta caracteristica Z_o, de lungime l, terminata cu impedanta Z_L

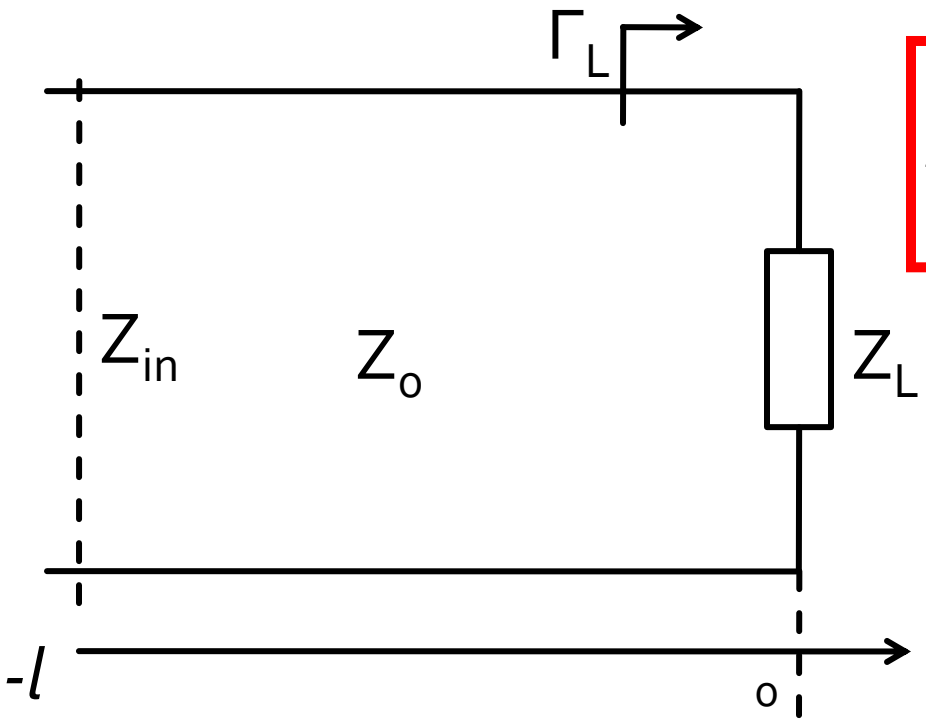

$$Z_{in} = Z_0 \cdot \frac{Z_L + j \cdot Z_0 \cdot \tan \beta \cdot l}{Z_0 + j \cdot Z_L \cdot \tan \beta \cdot l}$$

Linie fara pierderi +/-

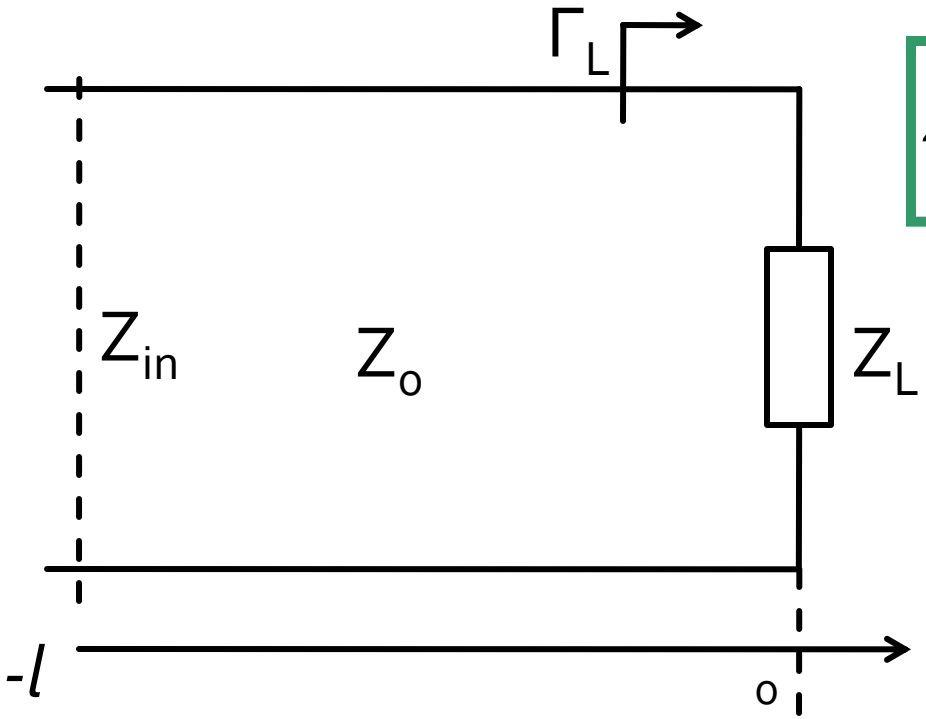

$$Z_{in} = Z_0 \cdot \frac{Z_L + j \cdot Z_0 \cdot \tan \beta \cdot l}{Z_0 + j \cdot Z_L \cdot \tan \beta \cdot l}$$

$$V(z) = V_0^+ e^{-\gamma \cdot z} + V_0^- e^{\gamma \cdot z}$$

$$I(z) = I_0^+ e^{-\gamma \cdot z} + I_0^- e^{\gamma \cdot z}$$

$$\Gamma(-l) = \Gamma(0) \cdot e^{-2j \cdot \beta \cdot l}$$

Analiza la nivel de rețea a circuitelor de microunde

Matricea ABCD – de transmisie

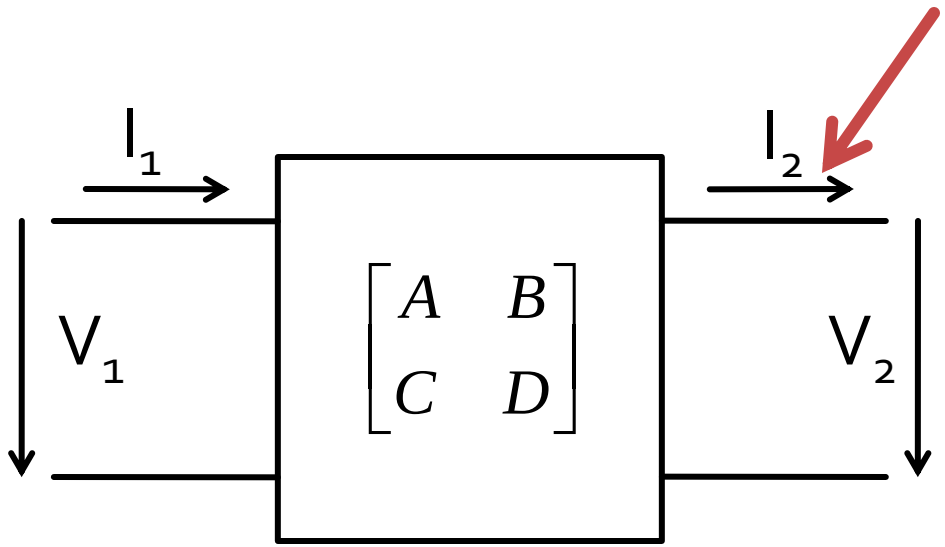

$$\begin{bmatrix} V_1 \\ I_1 \end{bmatrix} = \begin{bmatrix} A & B \\ C & D \end{bmatrix} \cdot \begin{bmatrix} V_2 \\ I_2 \end{bmatrix}$$

$$V_1 = A \cdot V_2 + B \cdot I_2$$

$$I_1 = C \cdot V_2 + D \cdot I_2$$

$$\begin{bmatrix} V_2 \\ I_2 \end{bmatrix} = \frac{1}{A \cdot D - B \cdot C} \cdot \begin{bmatrix} D & -B \\ -C & A \end{bmatrix} \cdot \begin{bmatrix} V_1 \\ I_1 \end{bmatrix}$$

$$A = \left.\frac{V_1}{V_2}\right|_{I_2=0} \qquad B = \left.\frac{V_1}{I_2}\right|_{V_2=0} \qquad C = \left.\frac{I_1}{V_2}\right|_{I_2=0} \qquad D = \left.\frac{I_1}{I_2}\right|_{V_2=0}$$

Exemplu utilizare matrice ABCD

- Sectionare circuit in elemente simple
- Generatoarele raman in exterior
- Daca e necesar, se creaza porturi de intrare si iesire lasate in gol

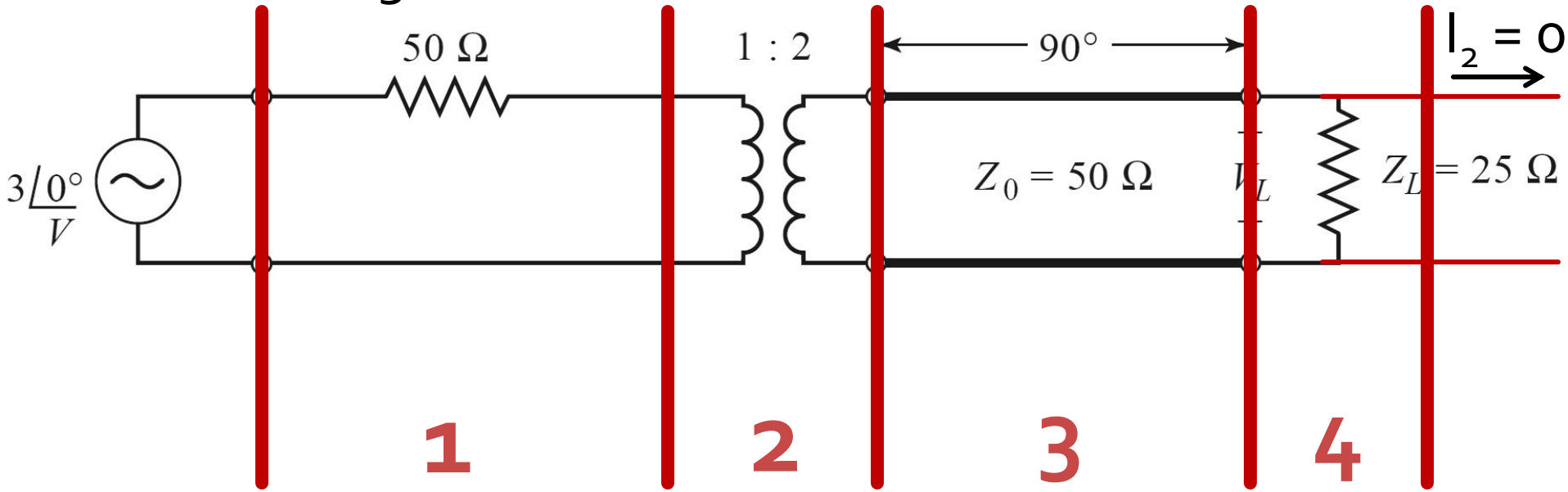

$$\begin{bmatrix} A & B \\ C & D \end{bmatrix} = M_1 \cdot M_2 \cdot M_3 \cdot M_4 \qquad V_1 = A \cdot V_2 + B \cdot I_2\big|_{I_2=0} \qquad V = A \cdot V_L \rightarrow V_L = \frac{V}{A}$$

Matricea S (repartitie)

- Scattering parameters

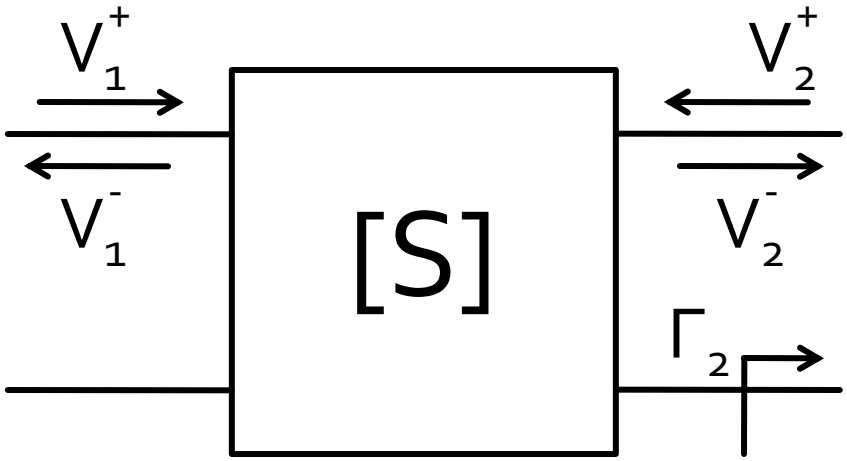

$$\begin{bmatrix} V_1^- \\ V_2^- \end{bmatrix} = \begin{bmatrix} S_{11} & S_{12} \\ S_{21} & S_{22} \end{bmatrix} \cdot \begin{bmatrix} V_1^+ \\ V_2^+ \end{bmatrix}$$

$$S_{11} = \left.\frac{V_1^-}{V_1^+}\right|_{V_2^+=0} \qquad S_{21} = \left.\frac{V_2^-}{V_1^+}\right|_{V_2^+=0}$$

- $V_2^+ = 0$ are semnificatia: la portul 2 este conectata impedanta care realizeaza conditia de adaptare (complex conjugat)

$$\Gamma_2 = 0 \rightarrow V_2^+ = 0$$

Matricea S (repartitie)

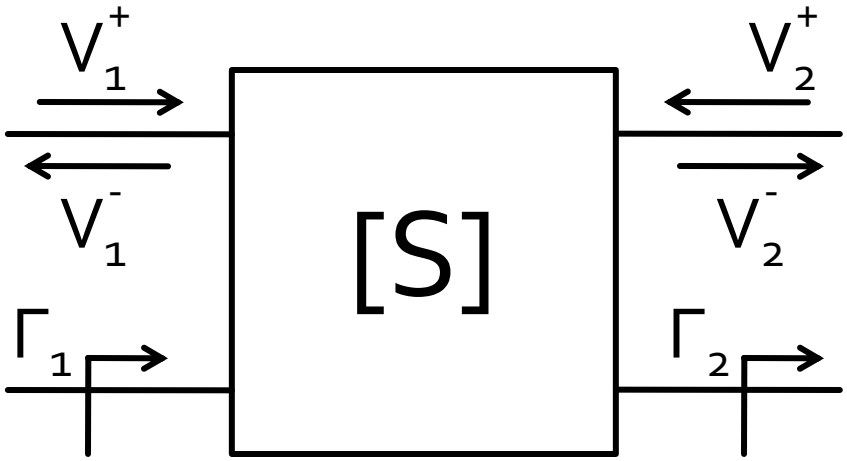

$$\begin{bmatrix} V_1^- \\ V_2^- \end{bmatrix} = \begin{bmatrix} S_{11} & S_{12} \\ S_{21} & S_{22} \end{bmatrix} \cdot \begin{bmatrix} V_1^+ \\ V_2^+ \end{bmatrix}$$

$$S_{11} = \left.\frac{V_1^-}{V_1^+}\right|_{V_2^+=0} = \Gamma_1\big|_{\Gamma_2=0}$$

$$S_{21} = \left.\frac{V_2^-}{V_1^+}\right|_{V_2^+=0} = T_{21}\big|_{\Gamma_2=0}$$

- S11 este coeficientul de reflexie la portul *1* cand cand portul *2* este terminat pe impedanta care realizeaza adaptarea
- S21 este coeficientul de transmisie de la portul *1* (**al doilea indice!**) la portul *2* (**primul indice!**) cand se depune semnal la portul *1* portul *2* este terminat pe impedanta care realizeaza adaptarea

Matricea S (repartitie)

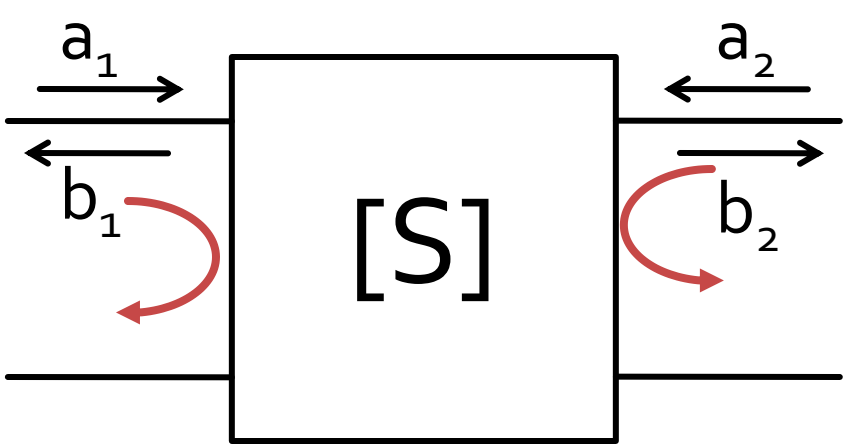

$$\begin{bmatrix} b_1 \\ b_2 \end{bmatrix} = \begin{bmatrix} S_{11} & S_{12} \\ S_{21} & S_{22} \end{bmatrix} \cdot \begin{bmatrix} a_1 \\ a_2 \end{bmatrix}$$

$$S_{11} = \left.\frac{b_1}{a_1}\right|_{a_2=0} \qquad S_{22} = \left.\frac{b_2}{a_2}\right|_{a_1=0}$$

- S_{11} si S_{22} sunt coeficienti de reflexie la intrare si iesire cand celalalt port este adaptat

Matricea S (repartitie)

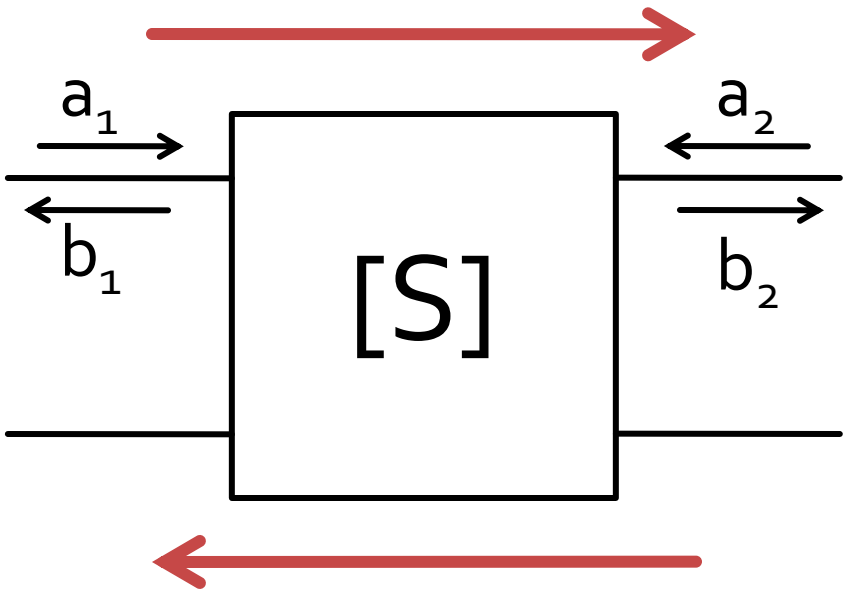

$$\begin{bmatrix} b_1 \\ b_2 \end{bmatrix} = \begin{bmatrix} S_{11} & S_{12} \\ S_{21} & S_{22} \end{bmatrix} \cdot \begin{bmatrix} a_1 \\ a_2 \end{bmatrix}$$

$$S_{21} = \left.\frac{b_2}{a_1}\right|_{a_2=0} \qquad S_{12} = \left.\frac{b_1}{a_2}\right|_{a_1=0}$$

- S_{21} si S_{12} sunt amplificari de semnal cand celalalt port este adaptat

Matricea S (repartitie)

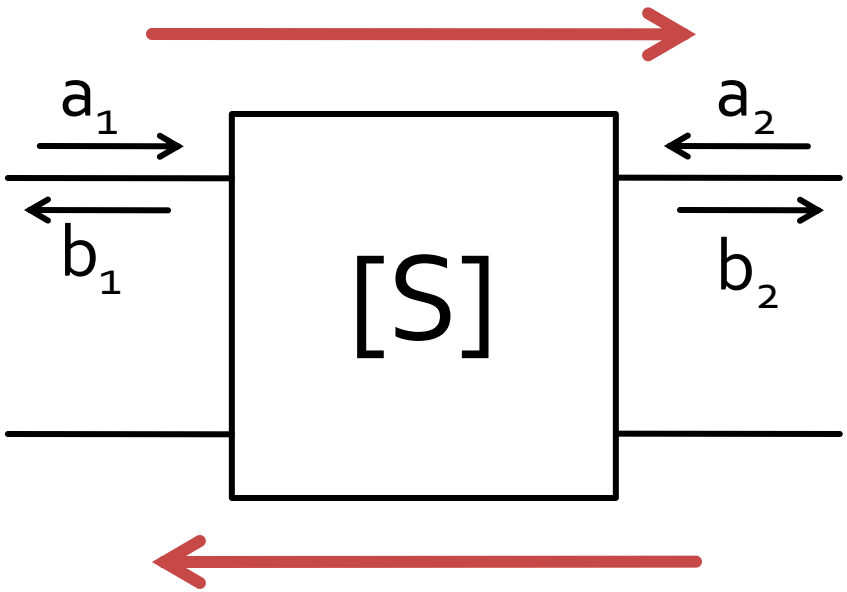

$$\begin{bmatrix} b_1 \\ b_2 \end{bmatrix} = \begin{bmatrix} S_{11} & S_{12} \\ S_{21} & S_{22} \end{bmatrix} \cdot \begin{bmatrix} a_1 \\ a_2 \end{bmatrix}$$

$$|S_{21}|^2 = \frac{Putere\ sarcina\ Z_0}{Putere\ sursa\ Z_0}$$

- a,b
  - informatia despre putere **SI** faza
- S_{ij}
  - influenta circuitului asupra puterii semnalului incluzand informatiile relativ la faza

Masurare S - VNA

- Vector Network Analyzer

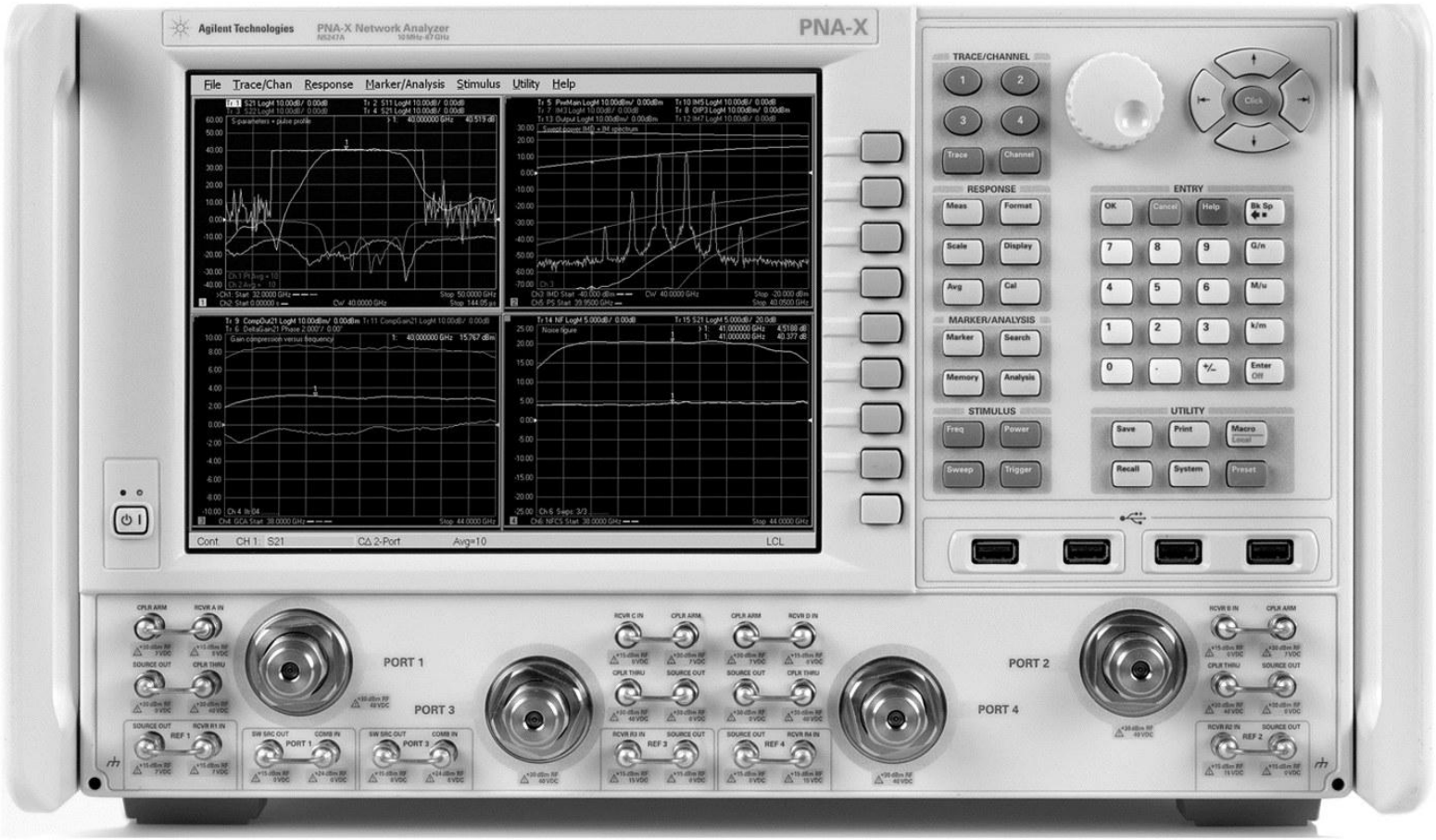

Figure 4.7
Courtesy of Agilent Technologies

Cuploare directionale si divizoare de putere

Cuploare/Divizoare

- Funcționalitatea dorită:
  - divizarea
  - combinarea
- puterii semnalului

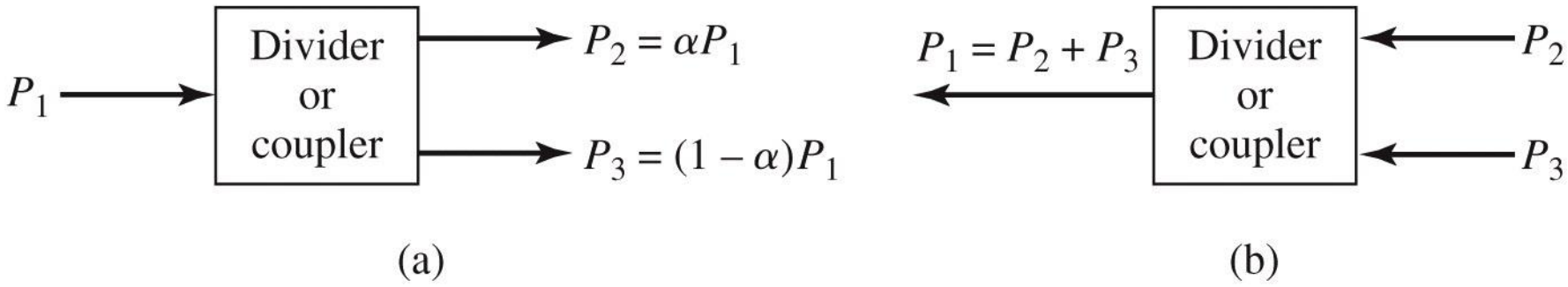

Figure 7.1
© John Wiley & Sons, Inc. All rights reserved.

Circuite cu trei porți

$$[S]=\begin{bmatrix} 0 & S_{12} & S_{13} \\ S_{12} & 0 & S_{23} \\ S_{13} & S_{23} & 0 \end{bmatrix}$$

- 6 ecuații / 3 necunoscute
  - nici o soluție posibila
- Un circuit cu 3 porți **NU** poate fi simultan:
  - reciproc
  - fara pierderi
  - adaptat simultan la toate cele 3 porți
- Renunțarea la una din cele 3 condiții conduce la circuite realizabile

Circuite cu patru porți

- Un circuit cu 4 porti care este simultan:
  - adaptat la toate portile
  - reciproc
  - fara pierderi
- este **intotdeauna directional**
  - puterea de semnal introdusa pe un port este trimisa **numai spre doua** din celelalte trei porturi

$$[S]=\begin{bmatrix} 0 & \alpha & \beta\cdot e^{j\theta} & 0 \\ \alpha & 0 & 0 & \beta\cdot e^{j\phi} \\ \beta\cdot e^{j\theta} & 0 & 0 & \alpha \\ 0 & \beta\cdot e^{j\phi} & \alpha & 0 \end{bmatrix}$$

Cuploare directionale

Laborator 2

Cuplor directional

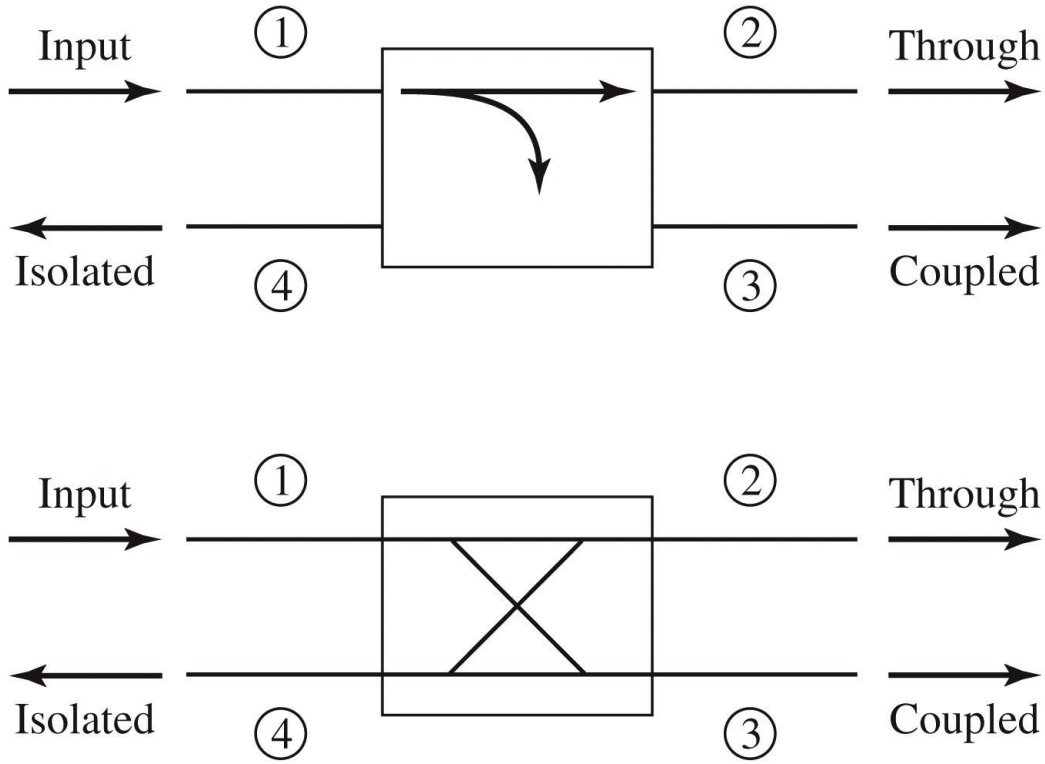

Figure 7.4
© John Wiley & Sons, Inc. All rights reserved.

$$\left|S_{12}\right|^2 = \alpha^2 = 1 - \beta^2$$

$$\left|S_{13}\right|^2 = \beta^2$$

Cuplaj

$$C = 10\log\frac{P_1}{P_3} = -20\cdot\log(\beta)\,[\mathrm{dB}]$$

Directivitate

$$D = 10\log\frac{P_3}{P_4} = 20\cdot\log\left(\frac{\beta}{\left|S_{14}\right|}\right)[\mathrm{dB}]$$

Izolare

$$I = 10\log\frac{P_1}{P_4} = -20\cdot\log\left|S_{14}\right|\,[\mathrm{dB}]$$

$$I = D + C\,,\ \ dB$$

Cuplorul in cuadratura

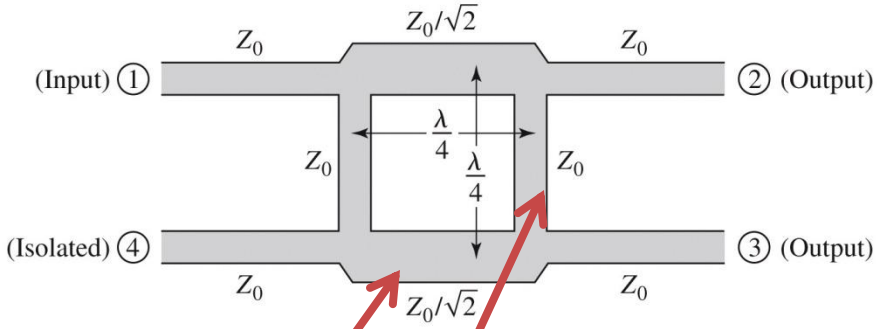

Figure 7.21
© John Wiley & Sons, Inc. All rights reserved.

$$y_2^2 = 1 + y_1^2$$

$$|\beta| = \frac{\sqrt{y_2^2 - 1}}{y_2}$$

$$C[\mathrm{dB}] = -20 \cdot \log_{10} \frac{\sqrt{y_2^2 - 1}}{y_2}$$

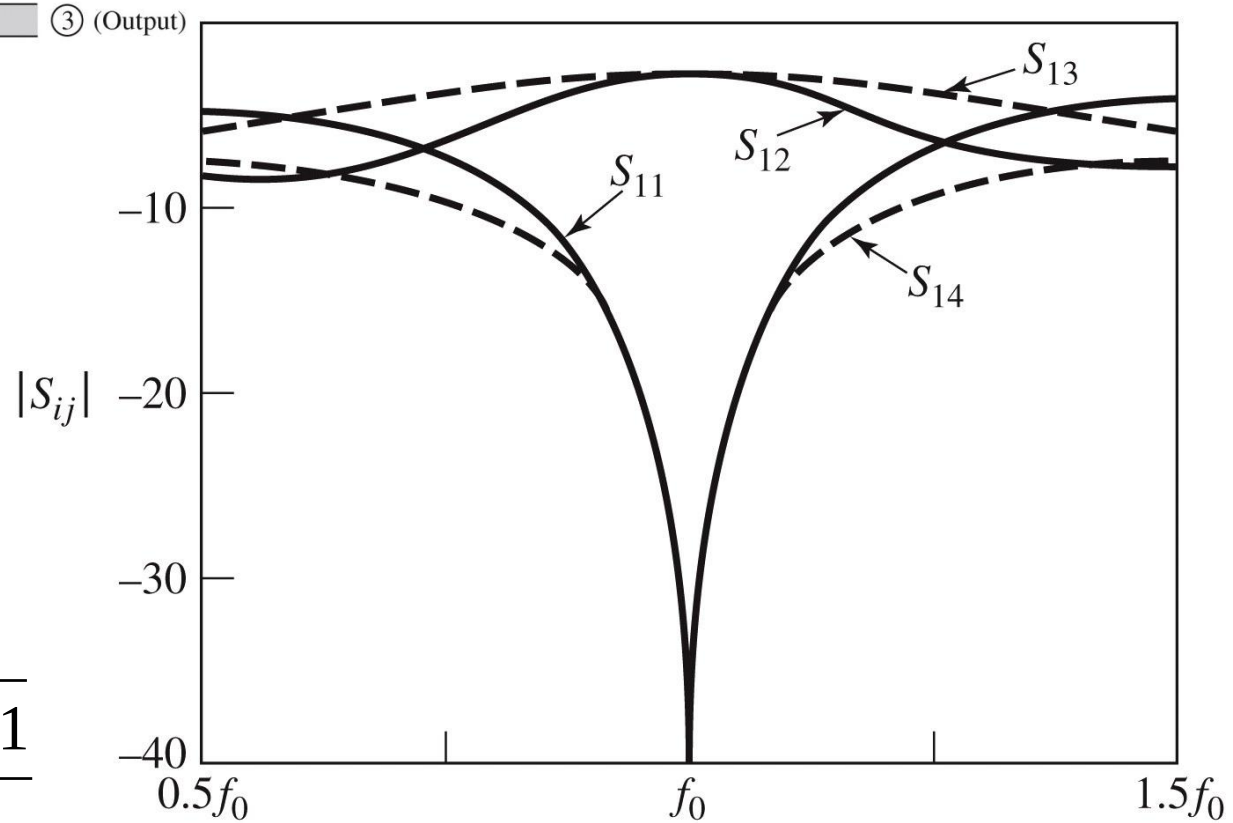

Figure 7.25
© John Wiley & Sons, Inc. All rights reserved.

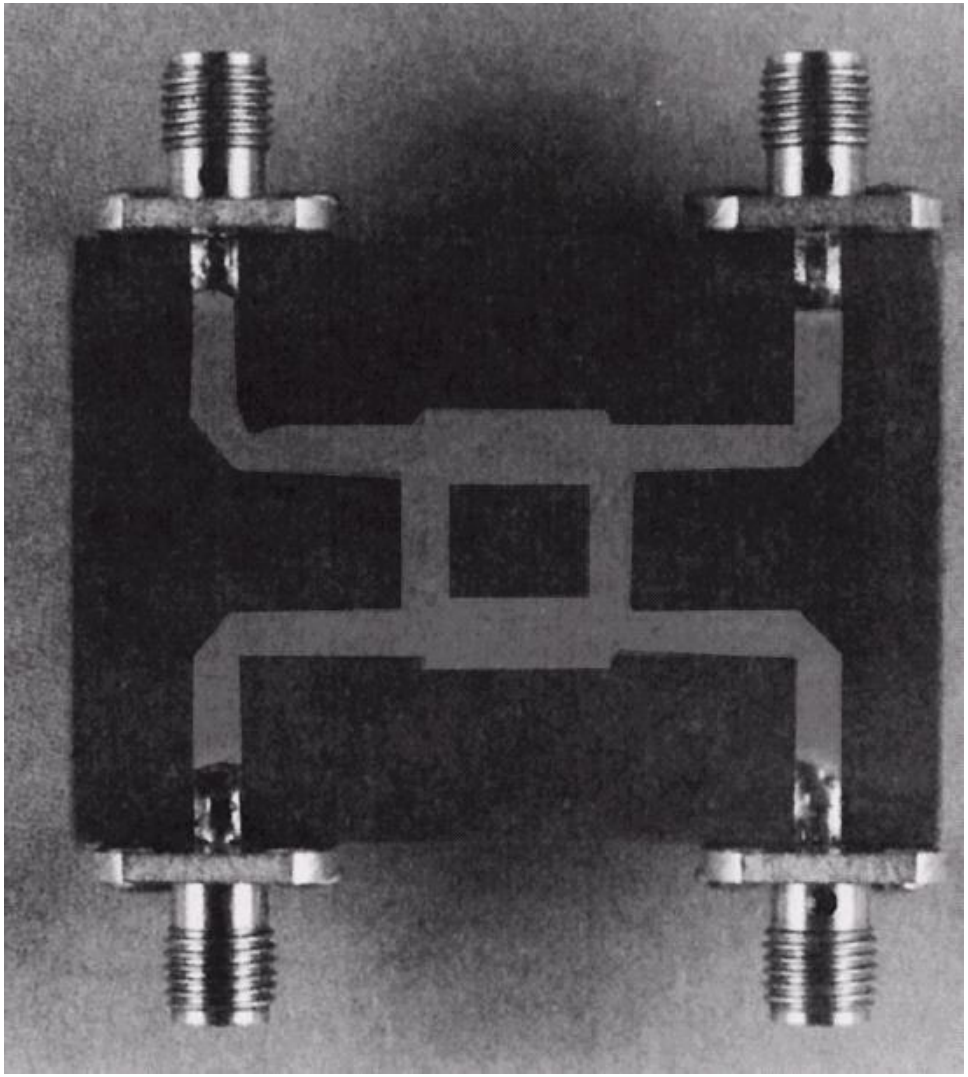

Cuplorul în inel

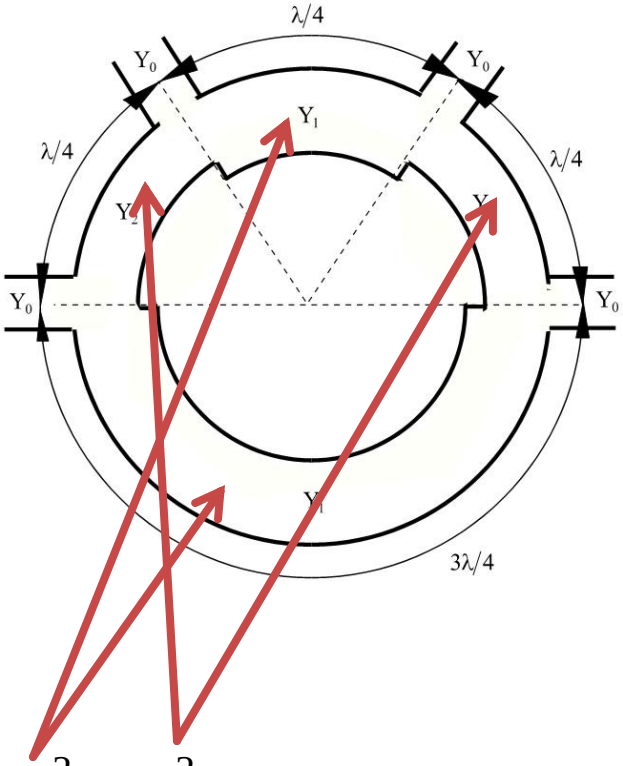

$$y_1^2 + y_2^2 = 1$$

$$|\beta| = y_1$$

$$C\,[\mathrm{dB}] = -20 \cdot \log_{10}(y_1)$$

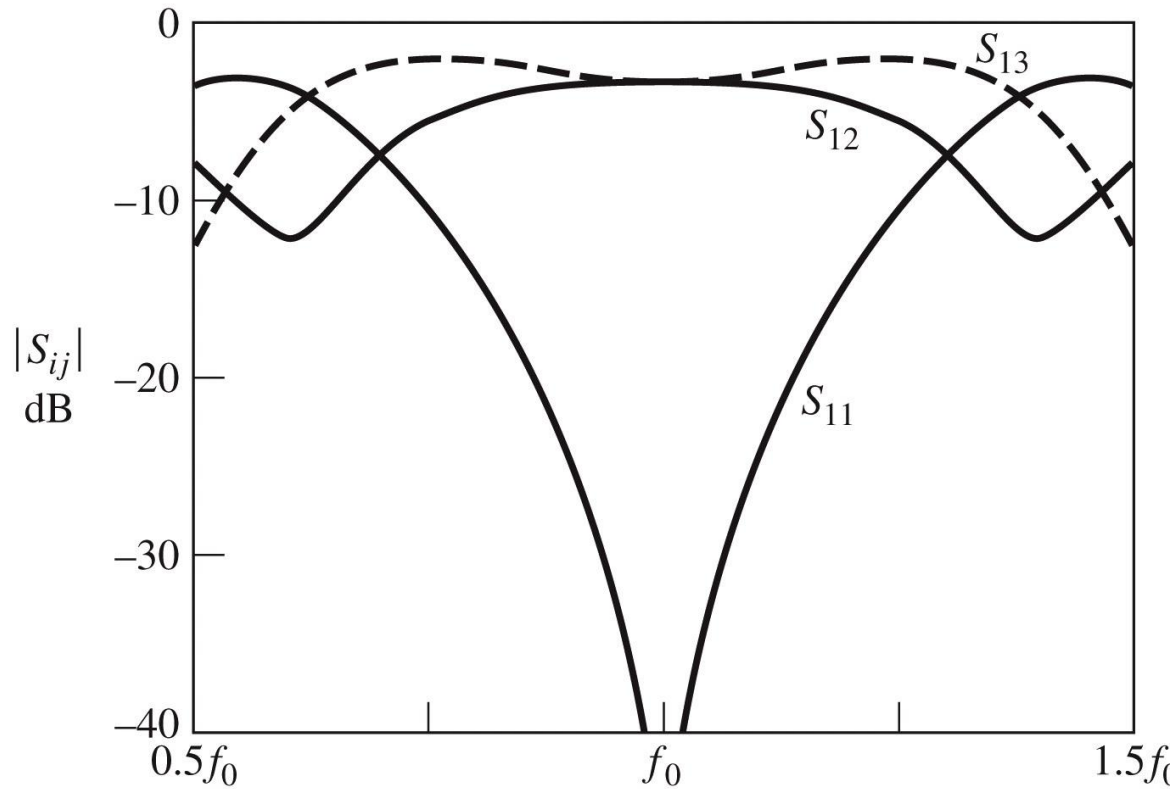

Figure 7.46

© John Wiley & Sons, Inc. All rights reserved.

Cuplor în inel

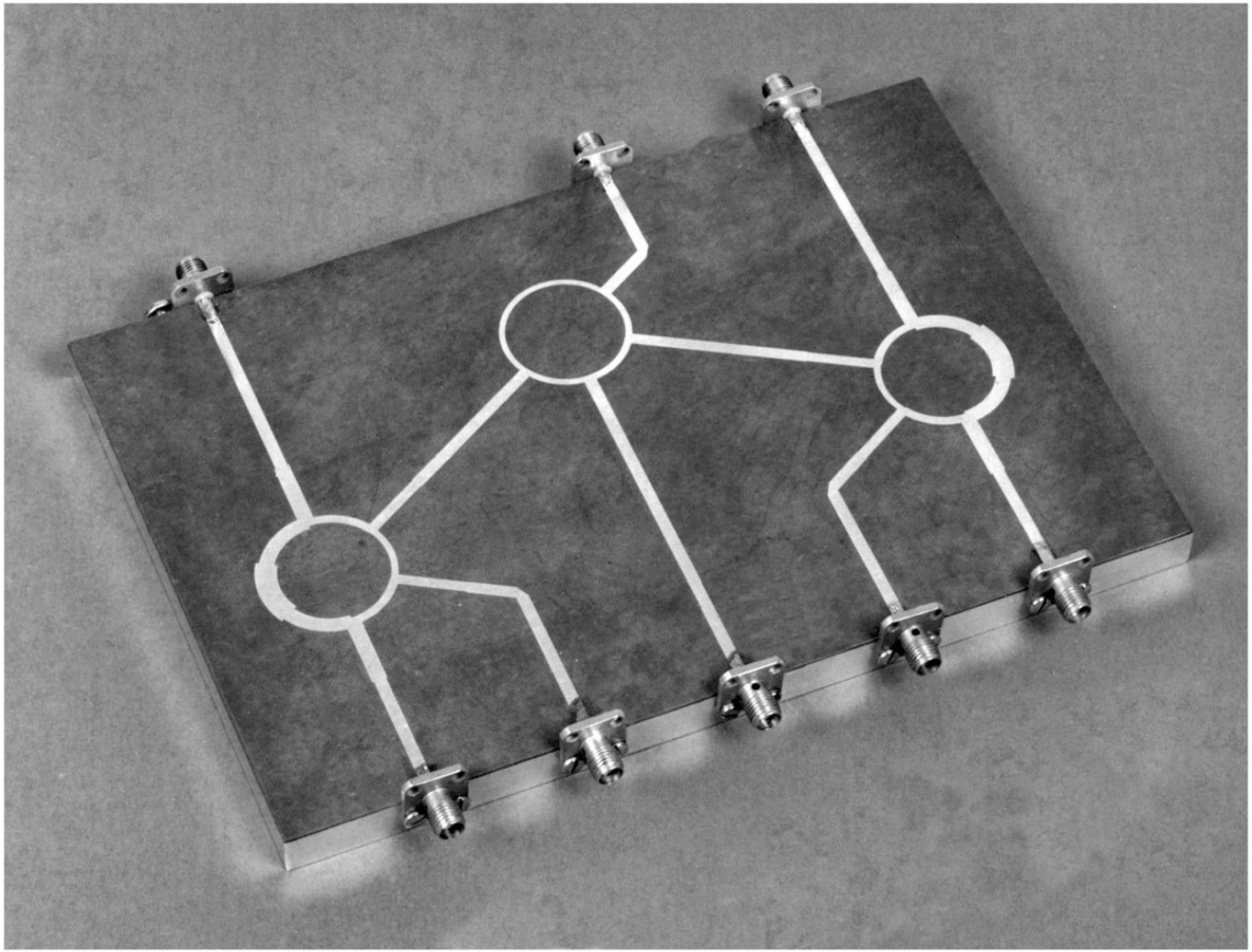

Figure 7.43
Courtesy of M. D. Abouzahra, MIT Lincoln Laboratory, Lexington, Mass.

Cuplor prin proximitate

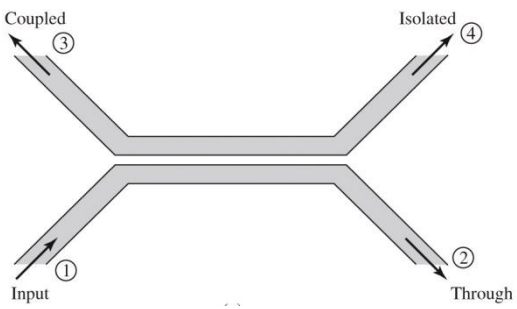

$$Z_{ce} Z_{co} = Z_0^2$$

$$|\beta| = \frac{Z_{ce} - Z_{co}}{Z_{ce} + Z_{co}}$$

$$C\,[\text{dB}] = -20 \cdot \log_{10}\left(\frac{Z_{ce} - Z_{co}}{Z_{ce} + Z_{co}}\right)$$

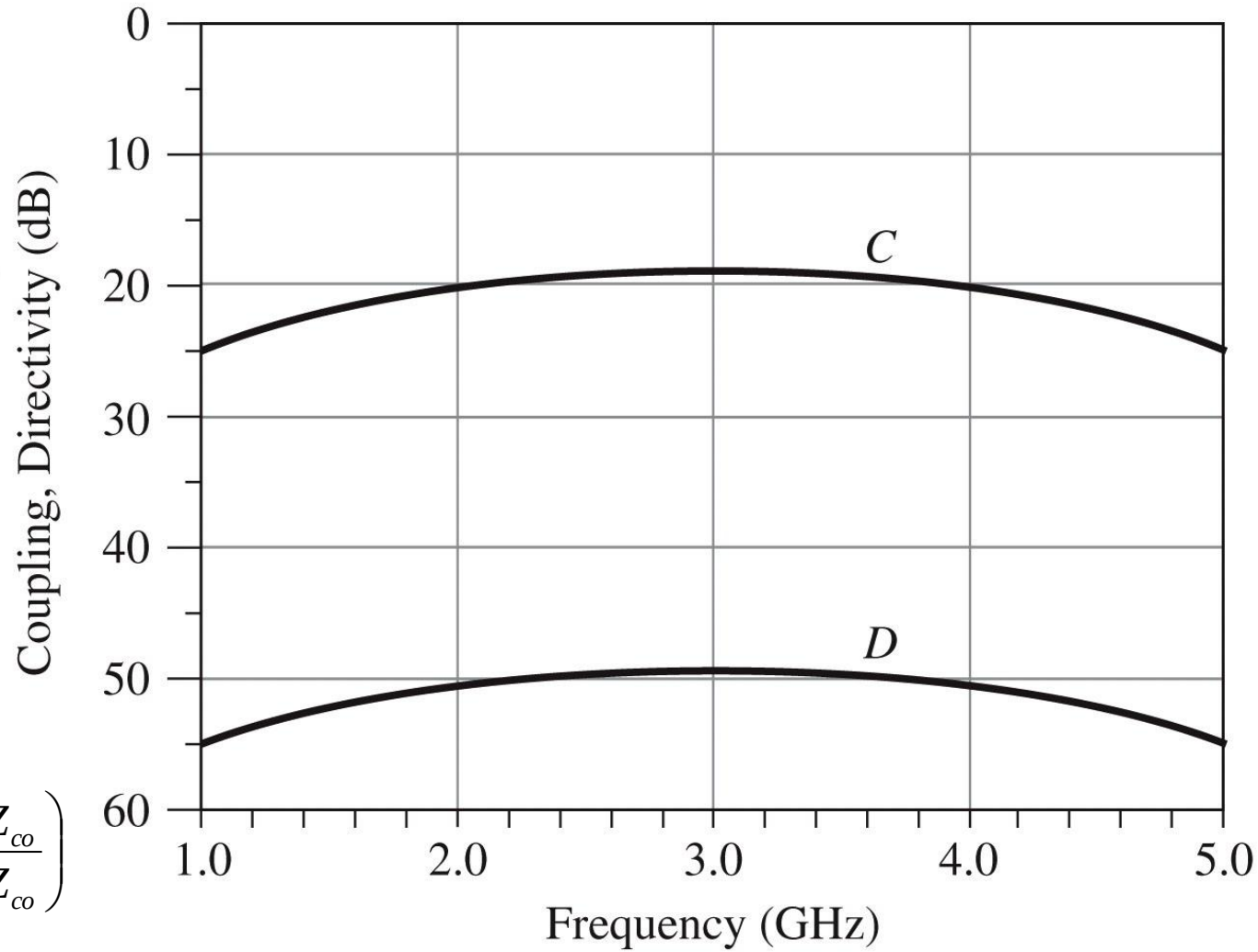

Figure 7.34
© John Wiley & Sons, Inc. All rights reserved.

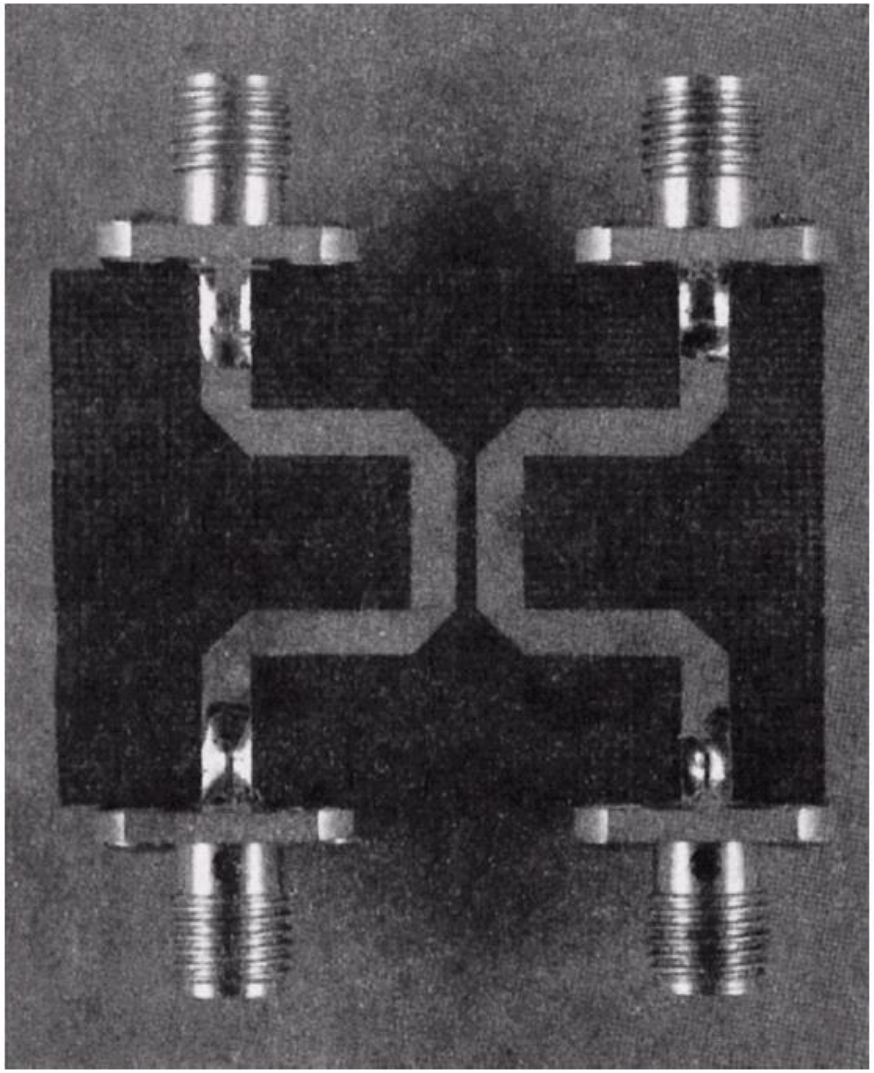

Analiza la nivel de rețea a circuitelor de microunde

Analiza pe mod par/impar (even/odd)

- utila/necesara pentru multiporti
- exemplu, rezistori, circuit cu 2 porturi

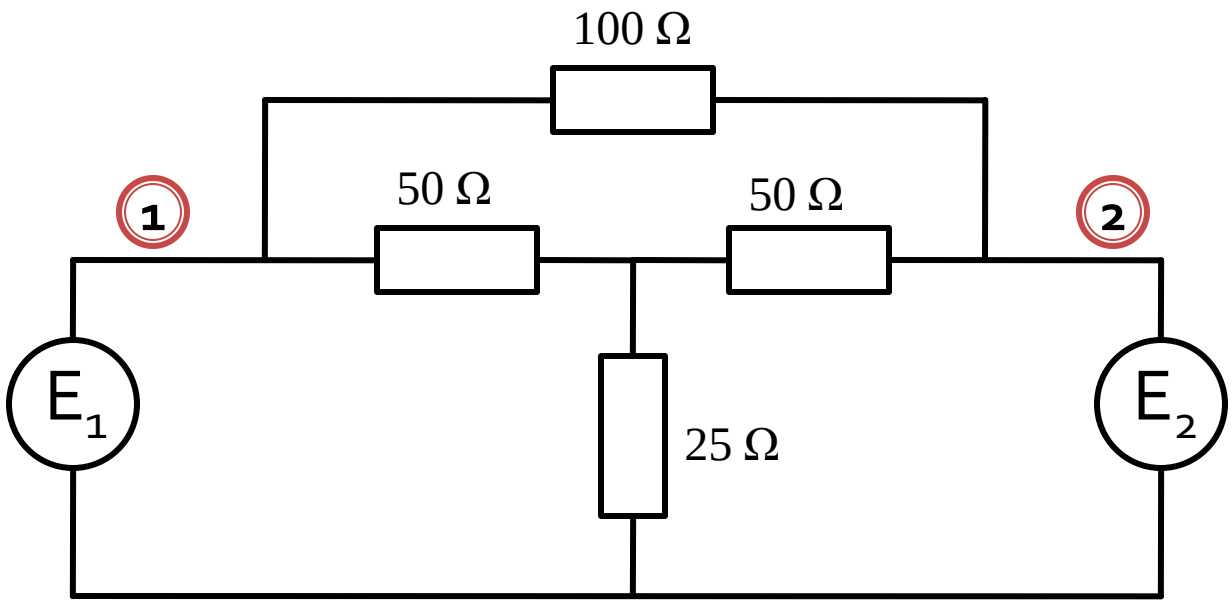

Analiza pe mod par/impar (even/odd)

- presupunem ca doresc Y_{11}
- $E_2 = 0$

$$Y_{11} = \left.\frac{I_1}{V_1}\right|_{V_2=0}$$

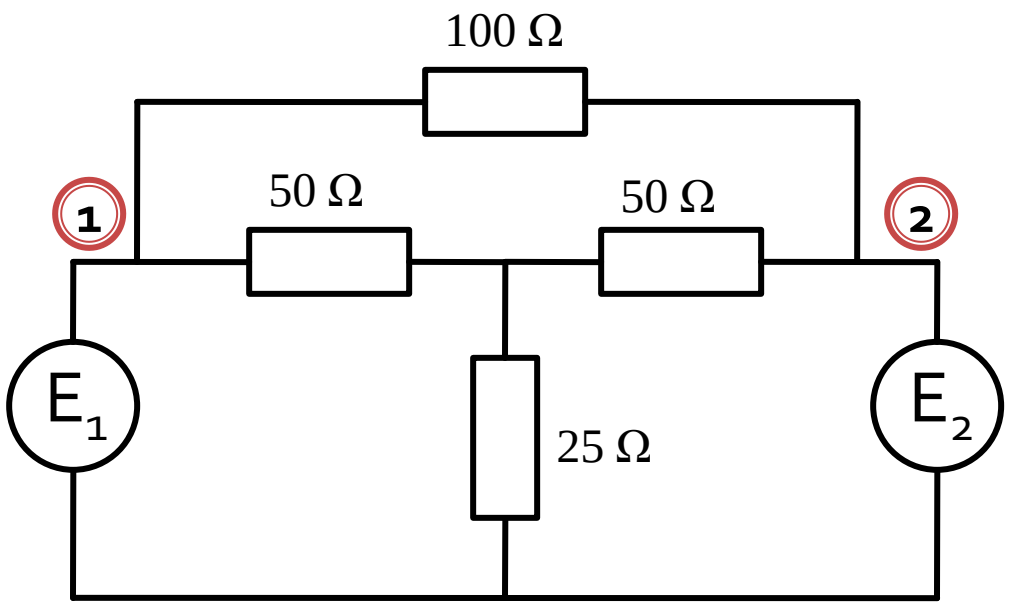

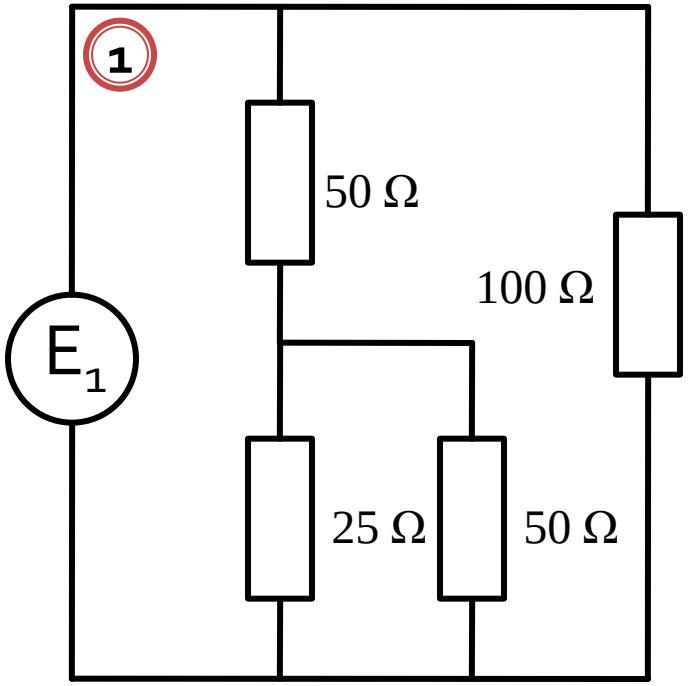

$$R_{ech} = 100\Omega \,||\, (50\Omega + 25\Omega \,||\, 50\Omega) =$$
$$= 100\Omega \,||\, (50\Omega + 16.67\Omega) = 100\Omega \,||\, 66.67\Omega = 40\Omega$$

$$Y_{11} = \left.\frac{I_1}{V_1}\right|_{V_2=0} = 0.025S$$

Analiza pe mod par/impar (even/odd)

- analiza pe mod par/impar beneficiaza de existenta in circuit a unor plane de simetrie
  - initiale
  - create

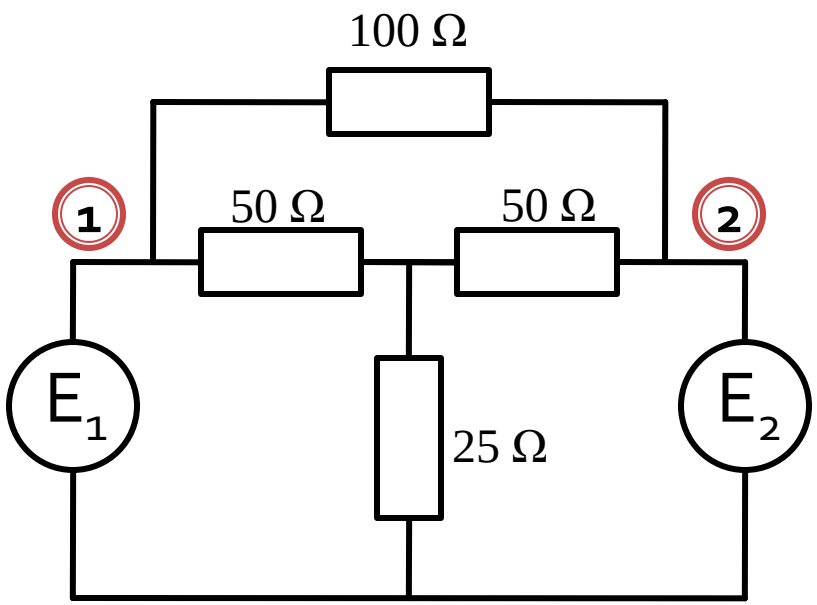

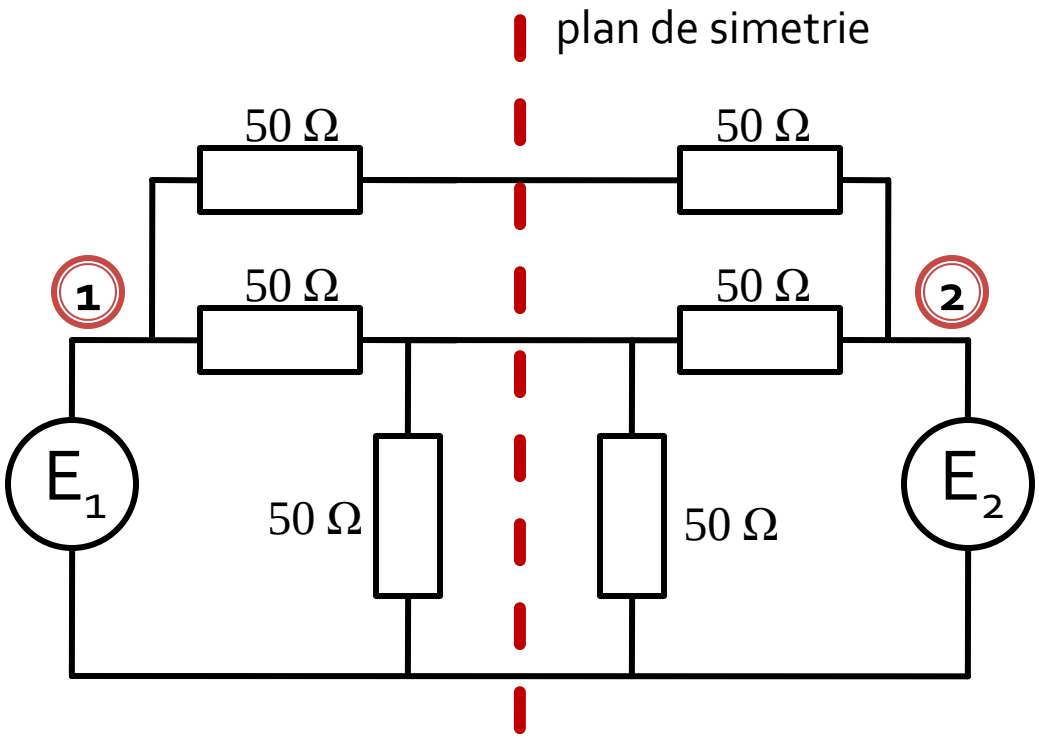

Analiza pe mod par/impar (even/odd)

- la atacul porturilor cu surse simetrice/antisimetrice planele de simetrie se transforma in
  - gol virtual
  - masa virtuala

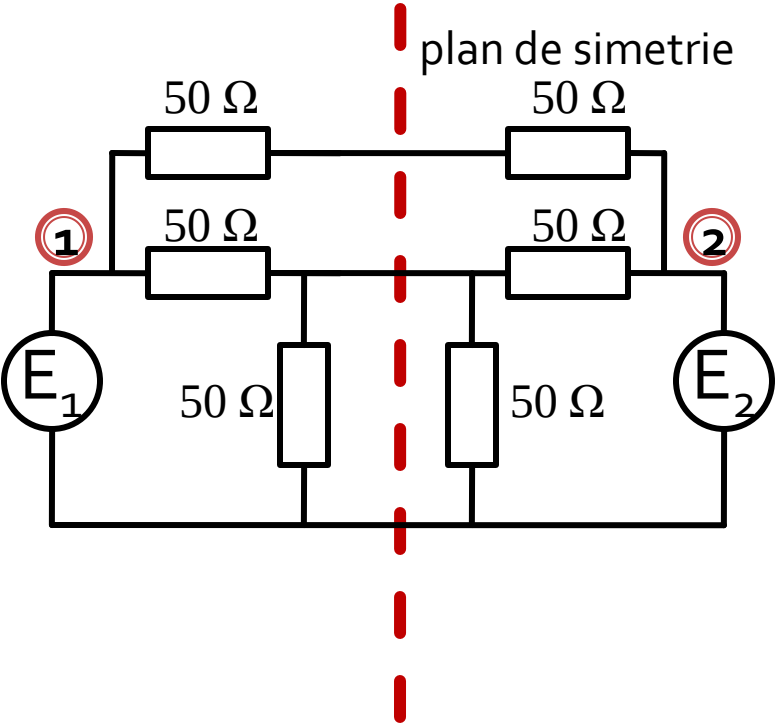

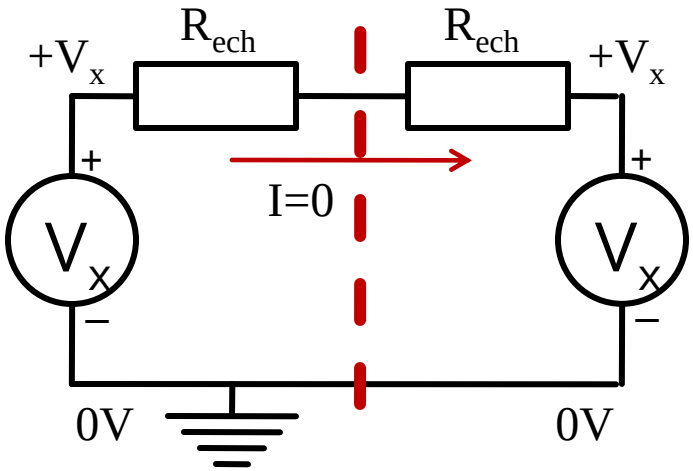

$$I = 0, \forall V_x$$

plan de simetrie
gol

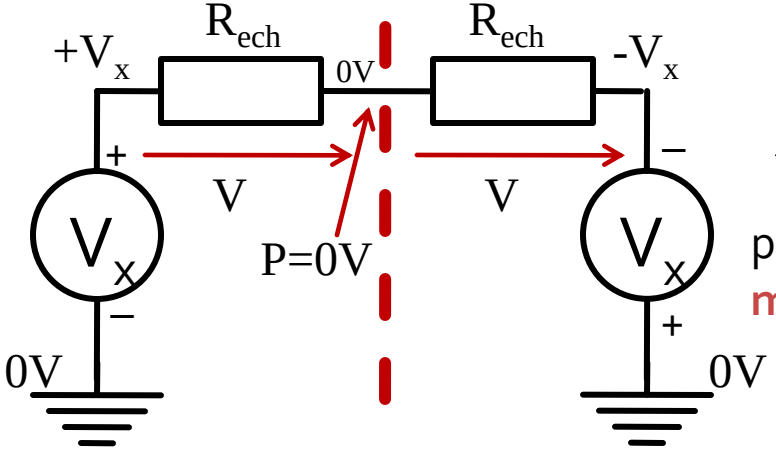

$$P = 0, \forall V_x$$

plan de simetrie
masa

Analiza pe mod par/impar (even/odd)

- orice combinatie de 2 surse poate fi echivalata pentru circuitele liniare cu o suprapunere:
  - o sursa simetrica
  - o sursa antisimetrica

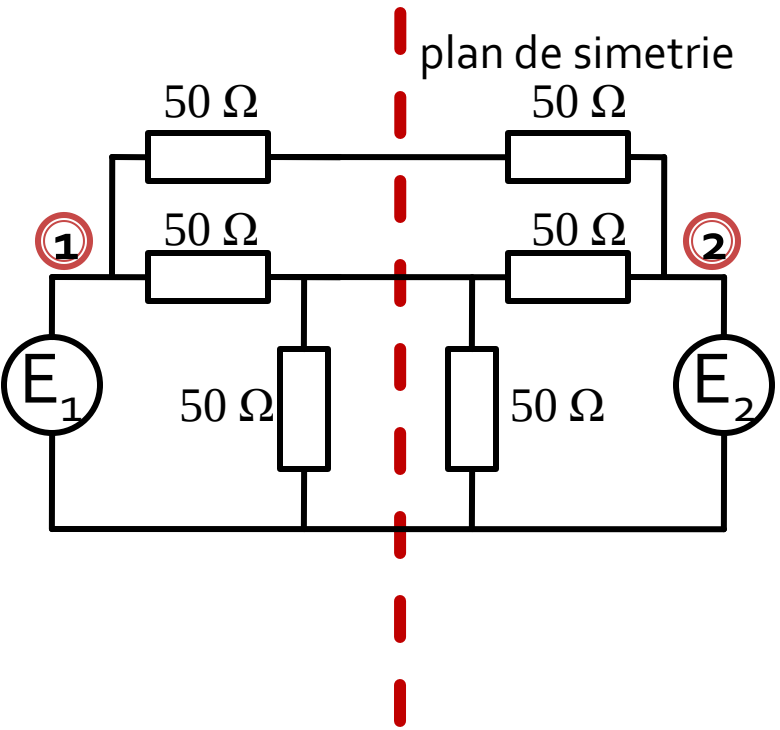

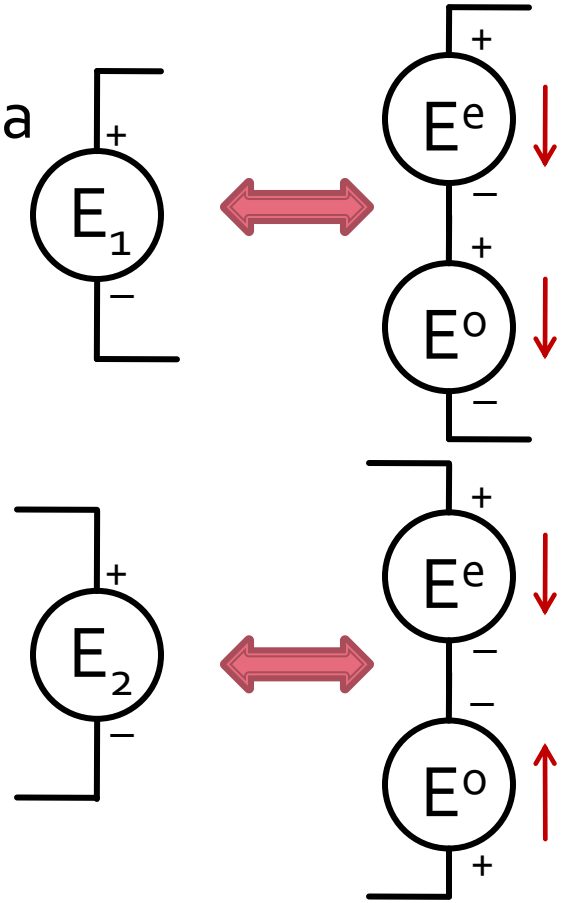

$$E_1 = E^e + E^o$$

$$E_2 = E^e - E^o$$

$$E^e = \frac{E_1 + E_2}{2}$$

$$E^o = \frac{E_1 - E_2}{2}$$

Analiza pe mod par/impar (even/odd)

- In circuite liniare putem aplica suprapunerea efectelor

Efect (Sursa1 + Sursa2) = Efect (Sursa1) + Efect (Sursa2)

Efect (PAR+ IMPAR) = Efect (PAR) + Efect (IMPAR)

Putem beneficia de avantajele simetriilor!!

Analiza pe mod par/impar (even/odd)

- exemplu

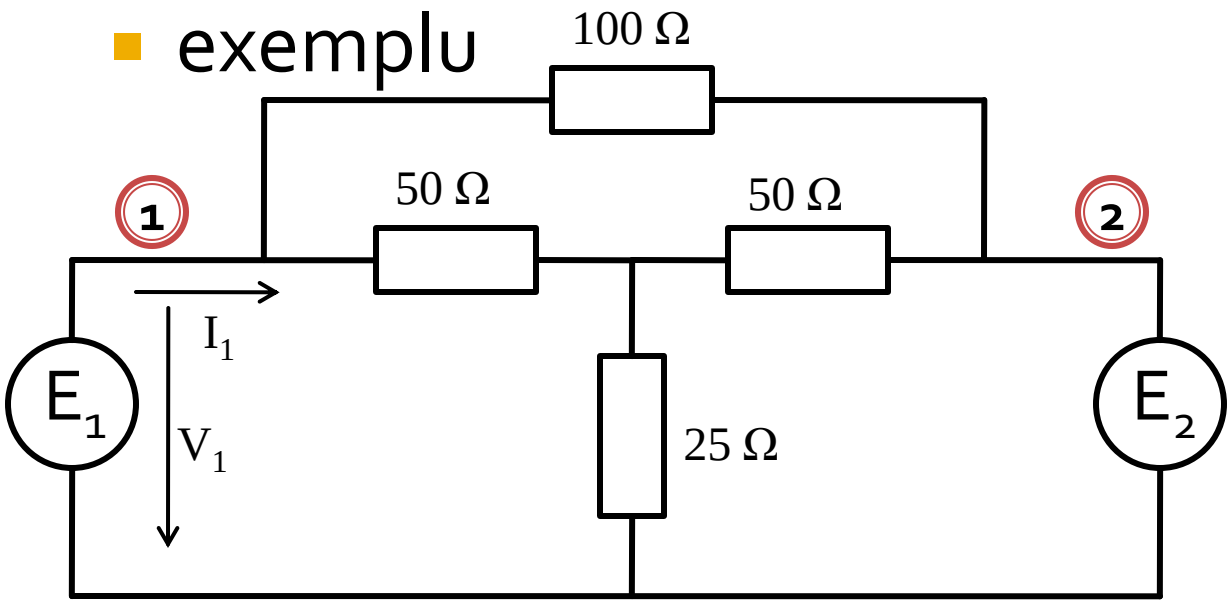

$$Y_{11} = \left.\frac{I_1}{V_1}\right|_{V_2=0}$$

$$V_2 \equiv E_2 = 0 \Rightarrow \quad E^e = \frac{E_1}{2} \qquad E^o = \frac{E_1}{2}$$

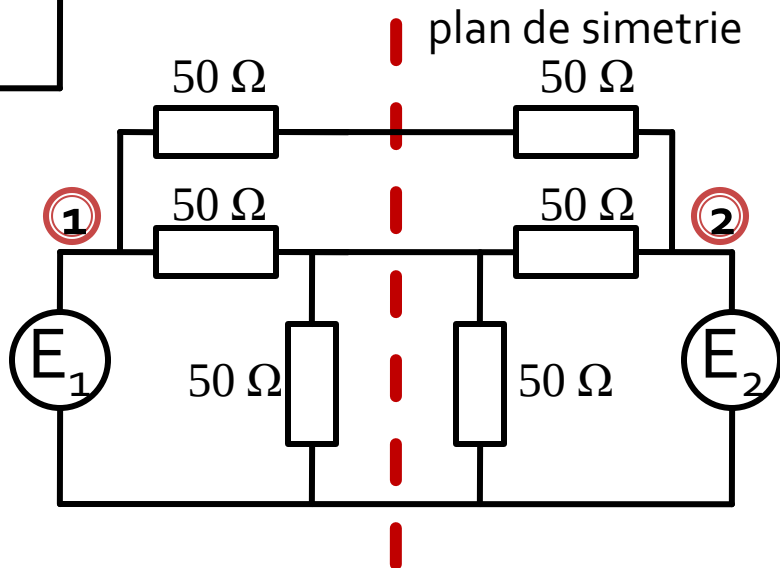

Analiza pe mod par/impar (even/odd)

- analiza pe mod par/impar

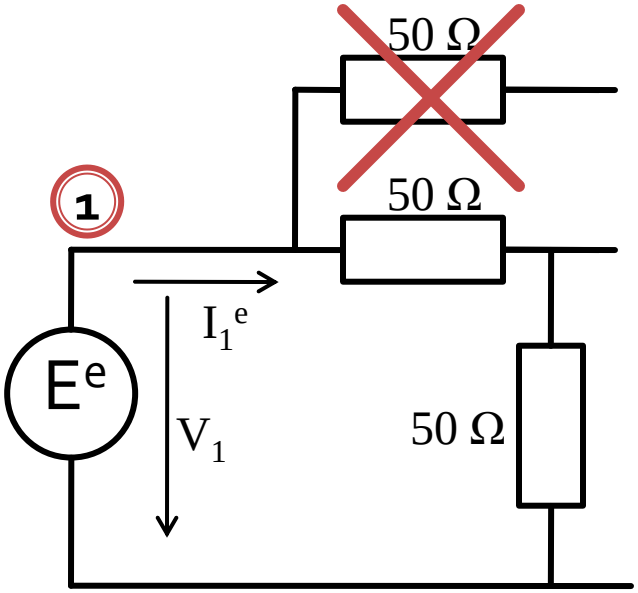

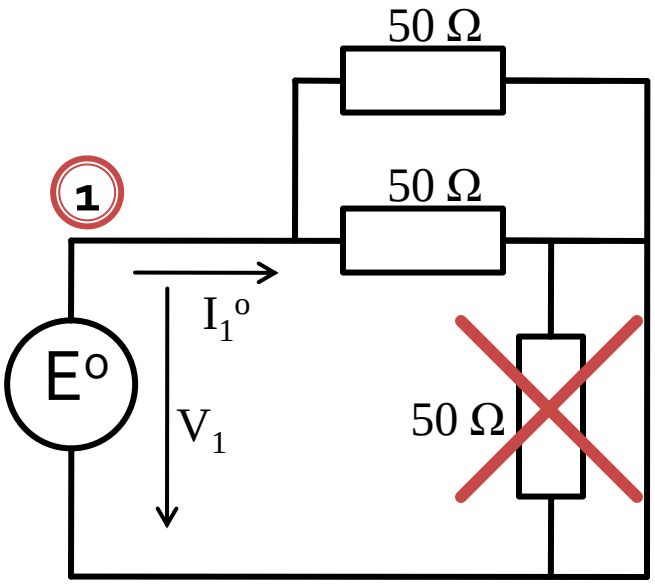

$$R_{ech}^{e} = 50\Omega + 50\Omega = 100\Omega$$

$$I_1^e = \frac{E^e}{R_{ech}^e} = \frac{E_1/2}{100\Omega} = \frac{E_1}{200\Omega}$$

$$R_{ech}^{o} = 50\Omega \,||\, 50\Omega = 25\Omega$$

$$I_1^o = \frac{E^o}{R_{ech}^o} = \frac{E_1/2}{25\Omega} = \frac{E_1}{50\Omega}$$

Analiza pe mod par/impar (even/odd)

- suprapunerea efectelor

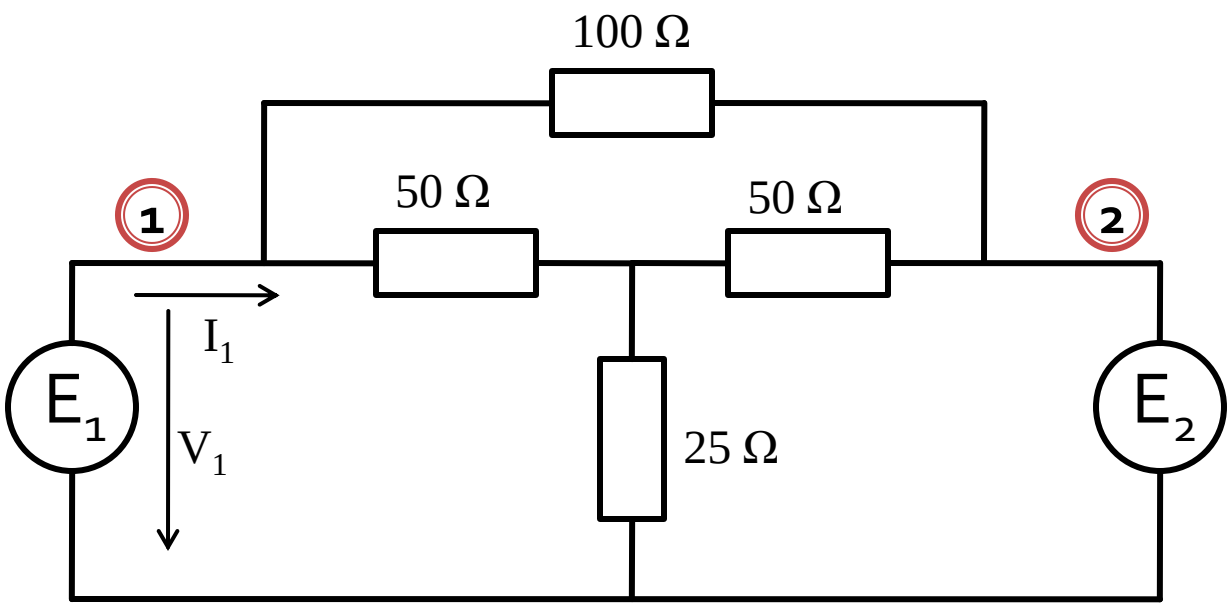

$$I_1 = I_1^e + I_1^o$$

$$V_1 = V_1^e + V_1^o$$

$$I_1 = I_1^e + I_1^o = \frac{E_1}{200\Omega} + \frac{E_1}{50\Omega} = \frac{E_1}{40\Omega}$$

$$V_1 = V_1^e + V_1^o = E_1$$

$$Y_{11} = \frac{I_1}{V_1} = \frac{1}{40\Omega} = 0.025S$$

Analiza pe mod par/impar (even/odd)

- In circuite liniare putem aplica suprapunerea efectelor
- avantaje
  - reducerea complexitatii circuitului
  - reducerea numarului de porturi (**principalul** avantaj)

Efect (PAR+ IMPAR) = Efect (PAR) + Efect (IMPAR)

Putem beneficia de avantajele simetriilor!!

Adaptarea de impedanța

Diagrama Smith

Diagrama Smith

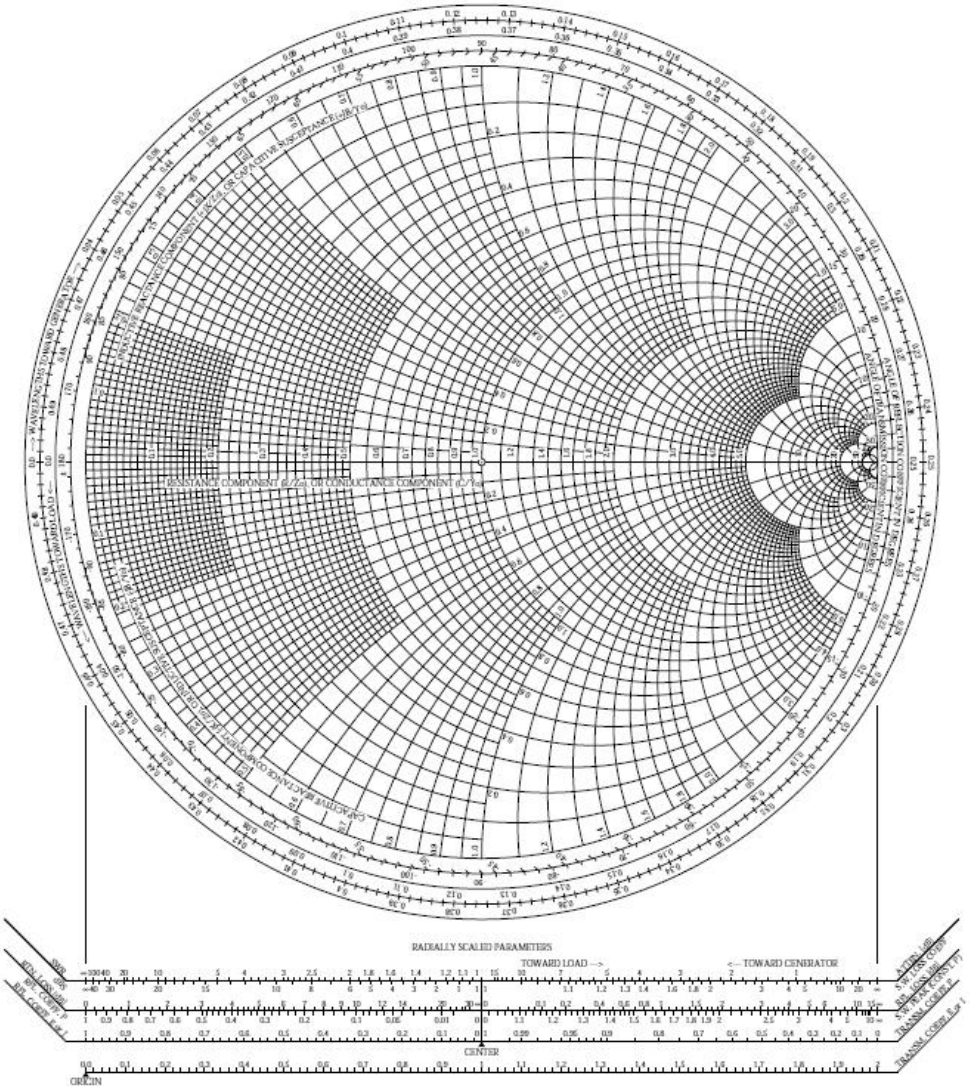

Diagrama Smith

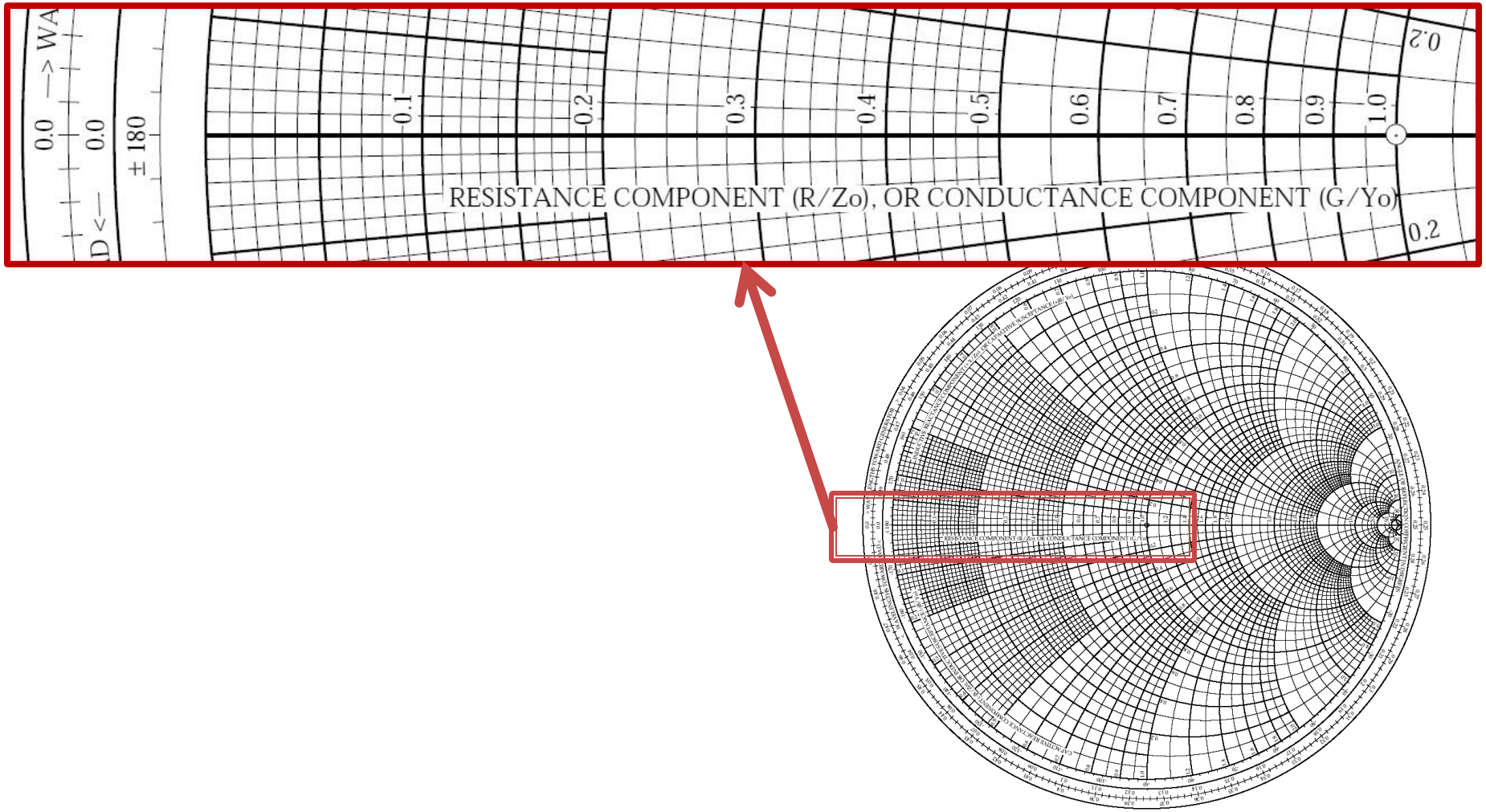

Diagrama Smith

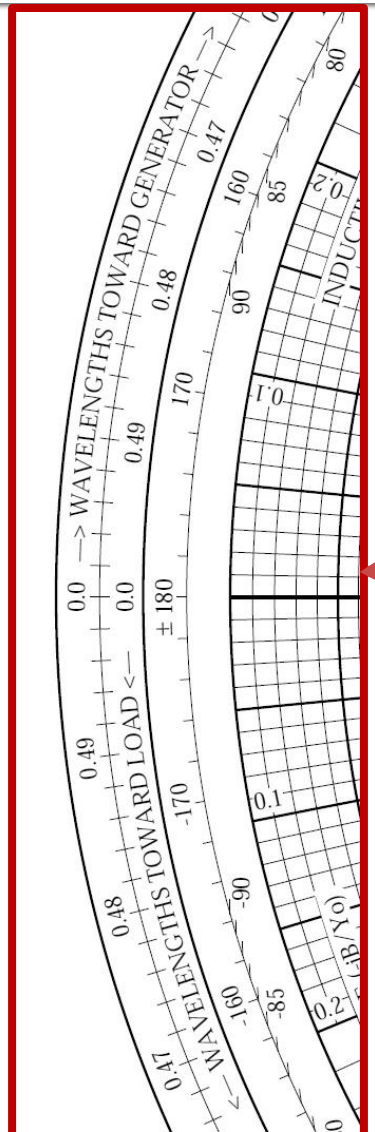

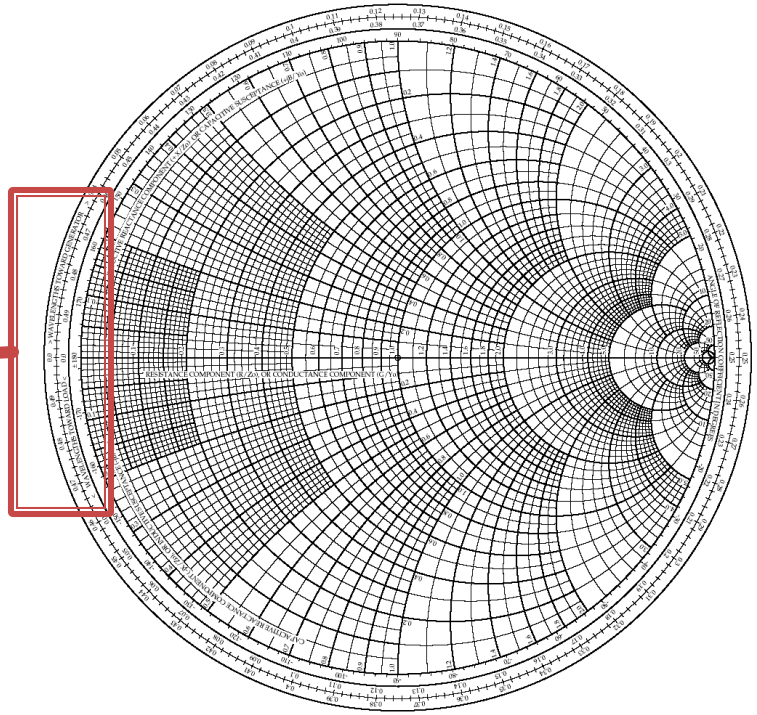

Diagrama Smith

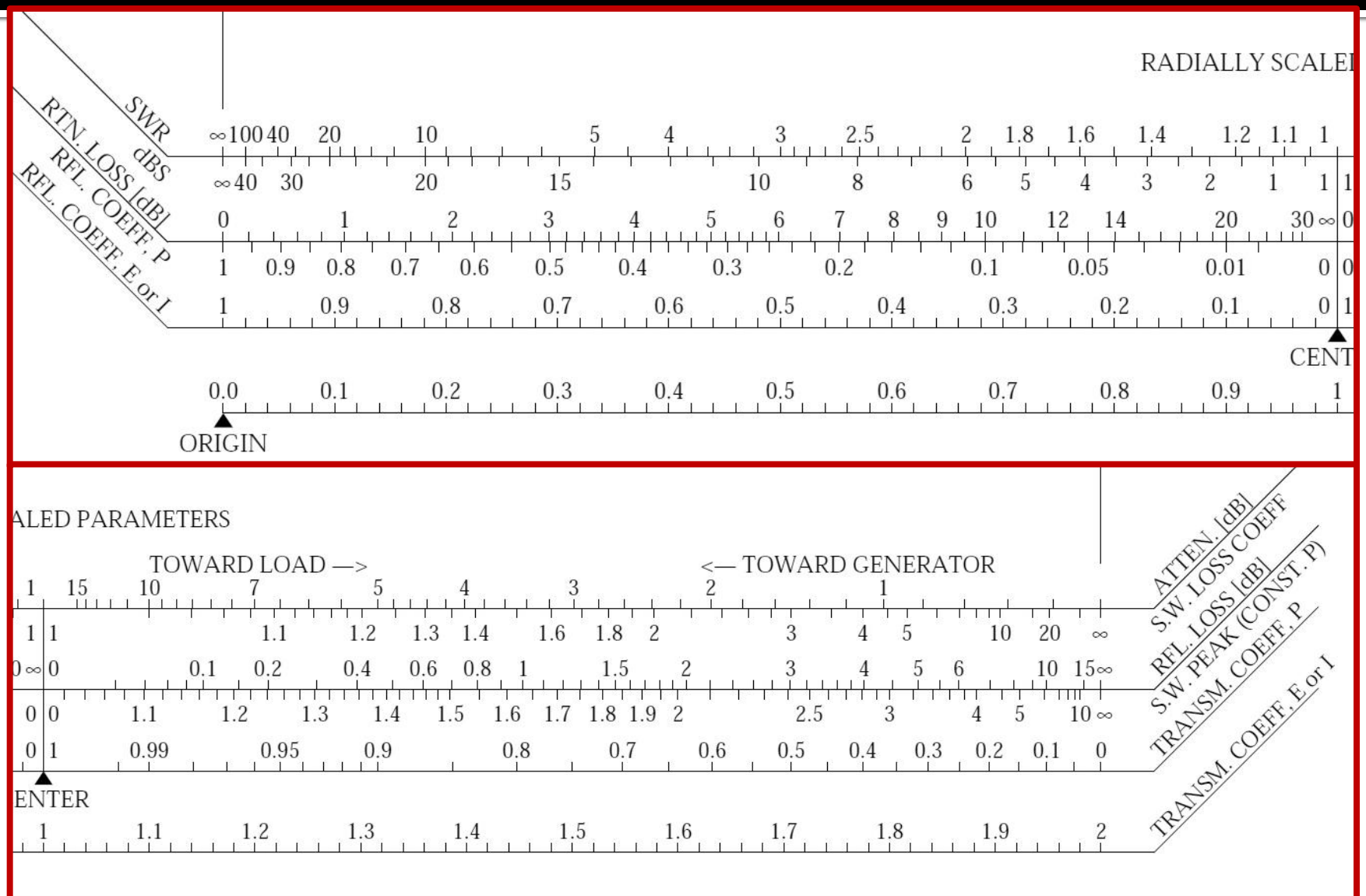

Diagrama Smith

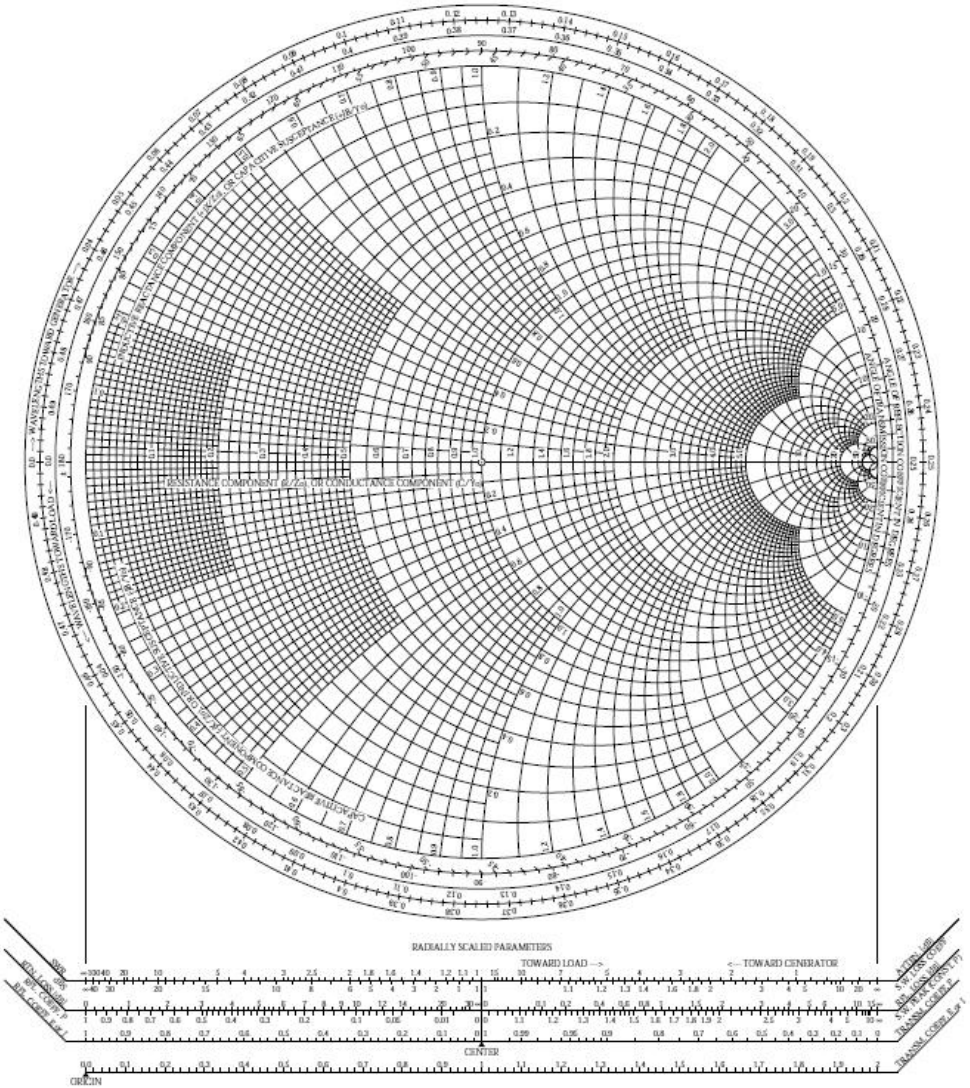

Diagrama Smith

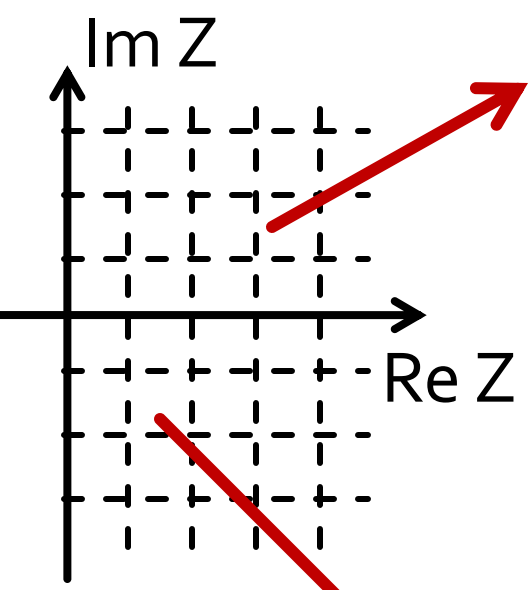

$$\Gamma = \frac{Z_L - Z_0}{Z_L + Z_0} = \frac{z_L - 1}{z_L + 1}$$

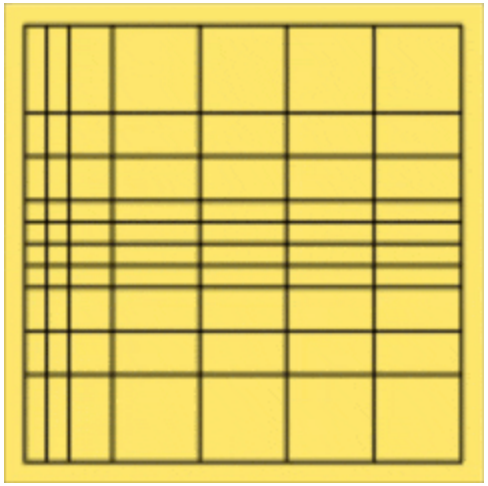

$$\Gamma = \frac{Z_L - Z_0}{Z_L + Z_0} = \frac{Y_0 - Y_L}{Y_0 + Y_L} = \frac{1 - y_L}{1 + y_L}$$

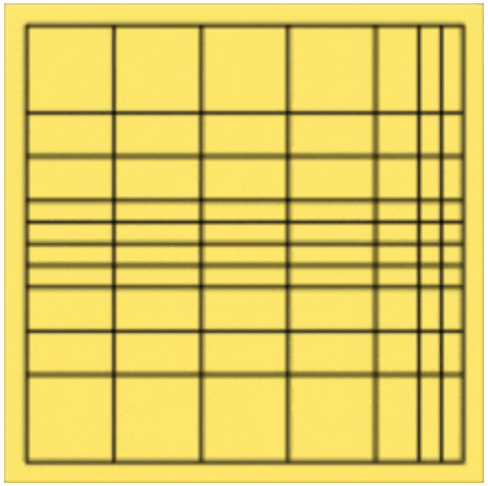

Utilizare standard

- linie de transmisie
  - 100Ω impedanta caracteristica
  - 0.3λ lungime
  - $Z_L = 40\Omega + j\cdot 70\Omega$
- Zin=?

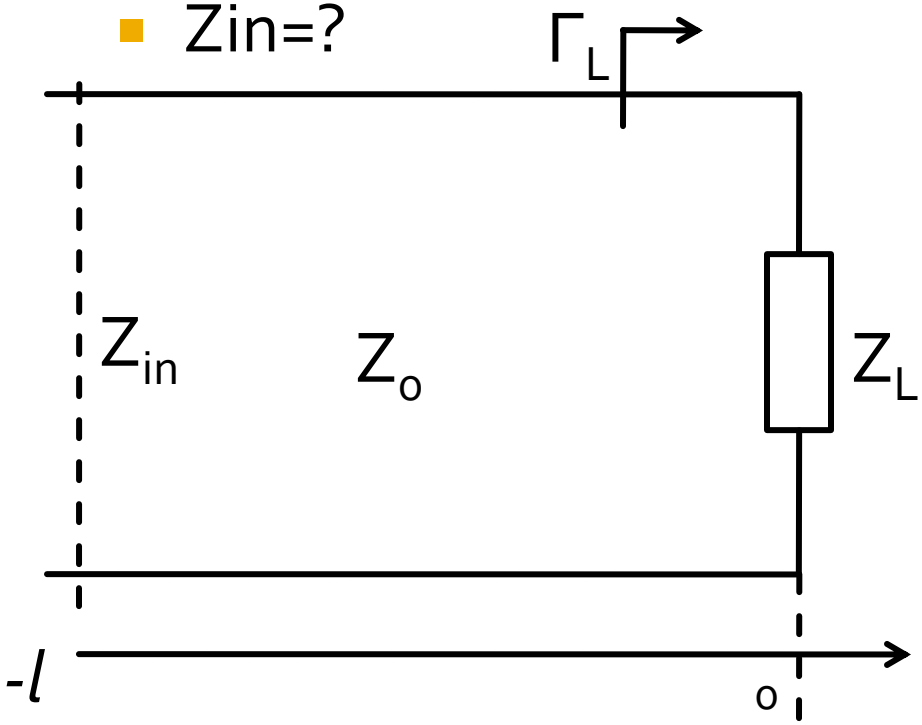

$$Z_{in} = Z_0 \cdot \frac{Z_L + j \cdot Z_0 \cdot \tan\beta \cdot l}{Z_0 + j \cdot Z_L \cdot \tan\beta \cdot l}$$

$$Z_{in} = 36.5340\Omega - j \cdot 61.1190\Omega$$

Utilizare standard

- linie de transmisie
  - 100Ω
  - 0.3λ lungime
  - $Z_L = 40\Omega + j\cdot 70\Omega$
- raportare la $Z_0 = 100\Omega$

$$z_L = \frac{Z_L}{Z_0} = 0.4 + j\cdot 0.7$$

- deplasare 0.3λ pe o linie cu $Z_0 = 100\Omega$ (cerc)
  - Plecand din z_L (0.105λ)
  - Pana la z_{in} (0.405λ)

$$z_{in} \approx 0.36 - j\cdot 0.6 = \frac{Z_{in}}{Z_0}$$

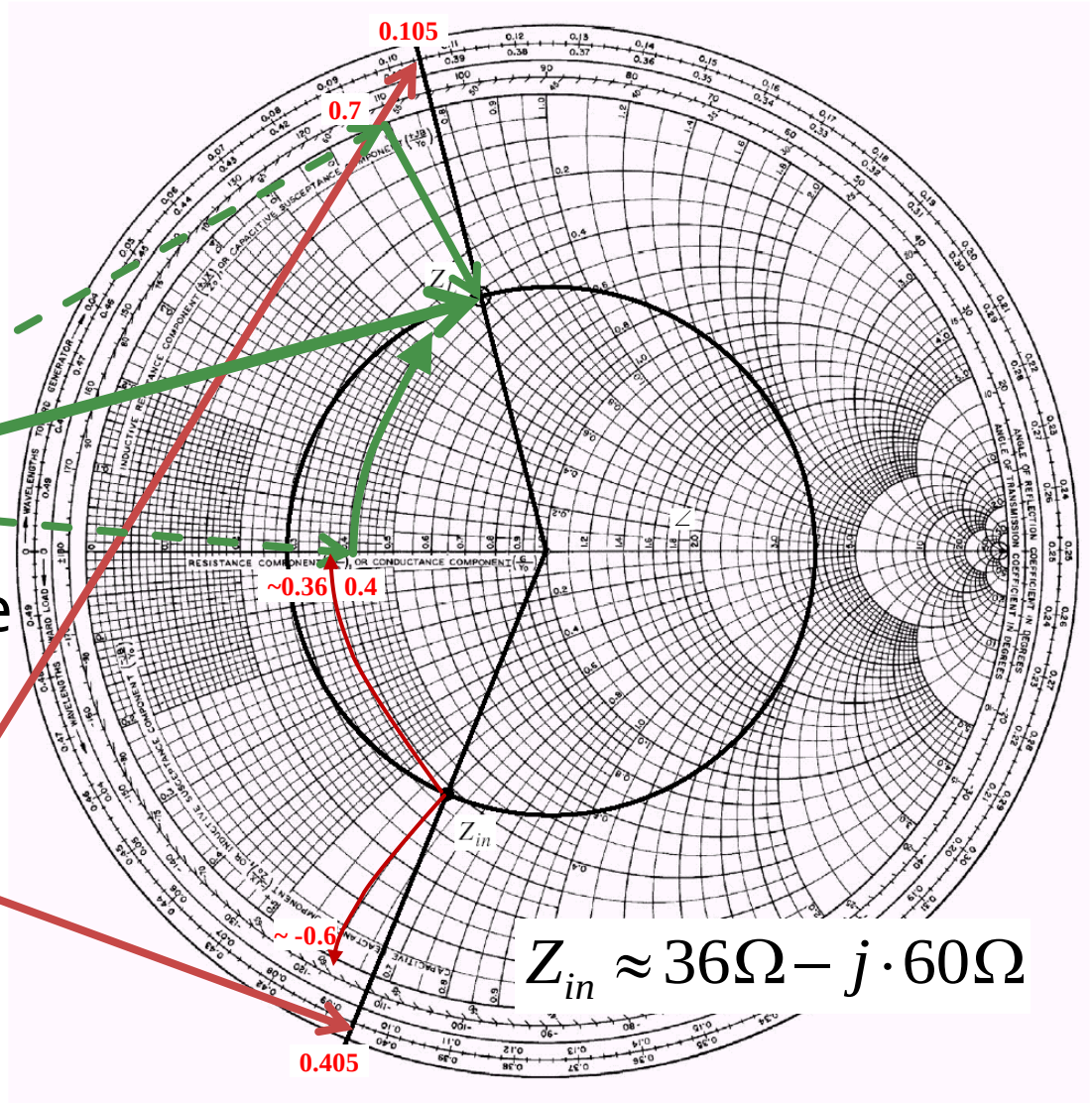

$$Z_{in} \approx 36\Omega - j\cdot 60\Omega$$

Diagrama Smith

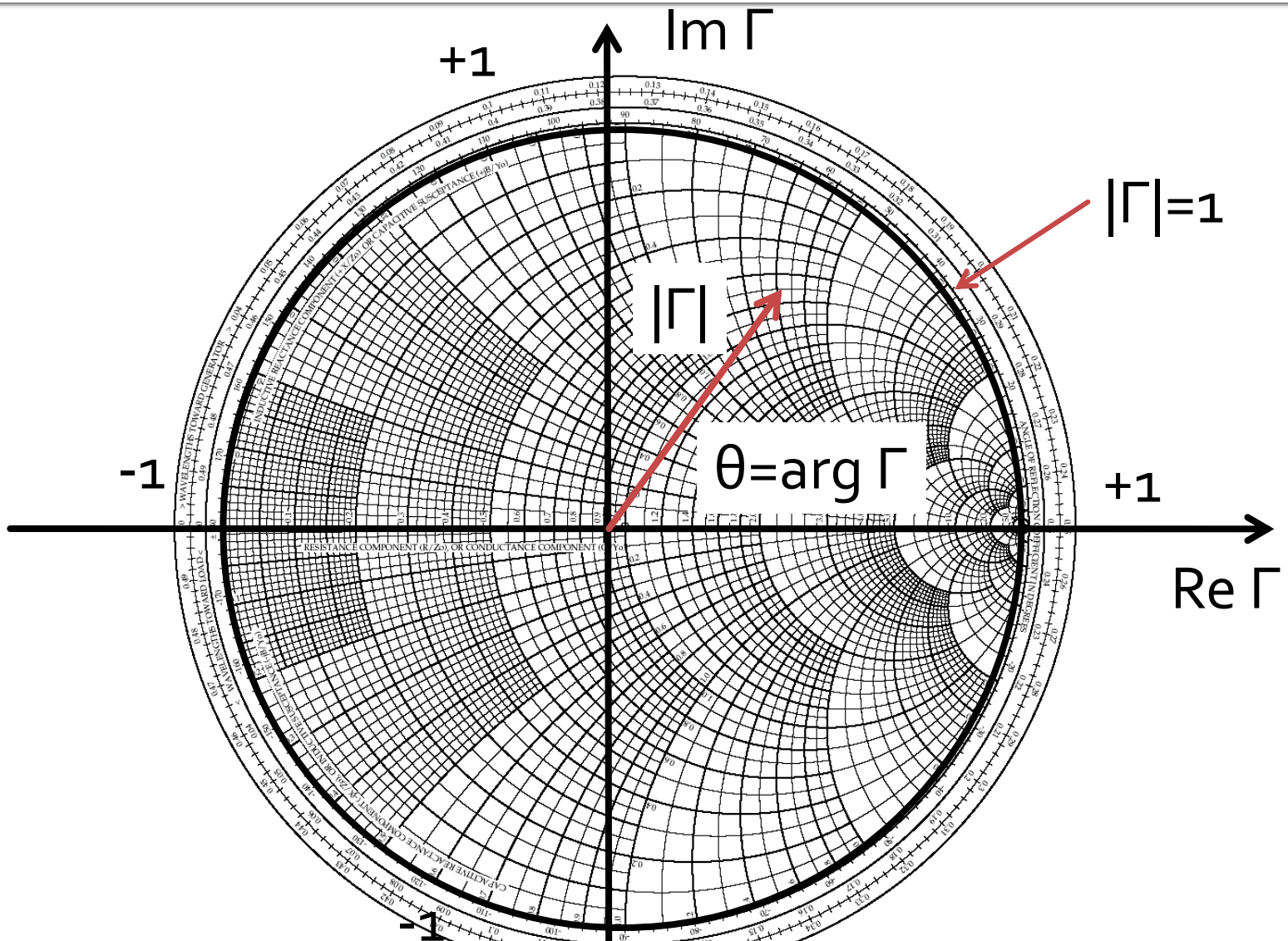

Diagrama Smith

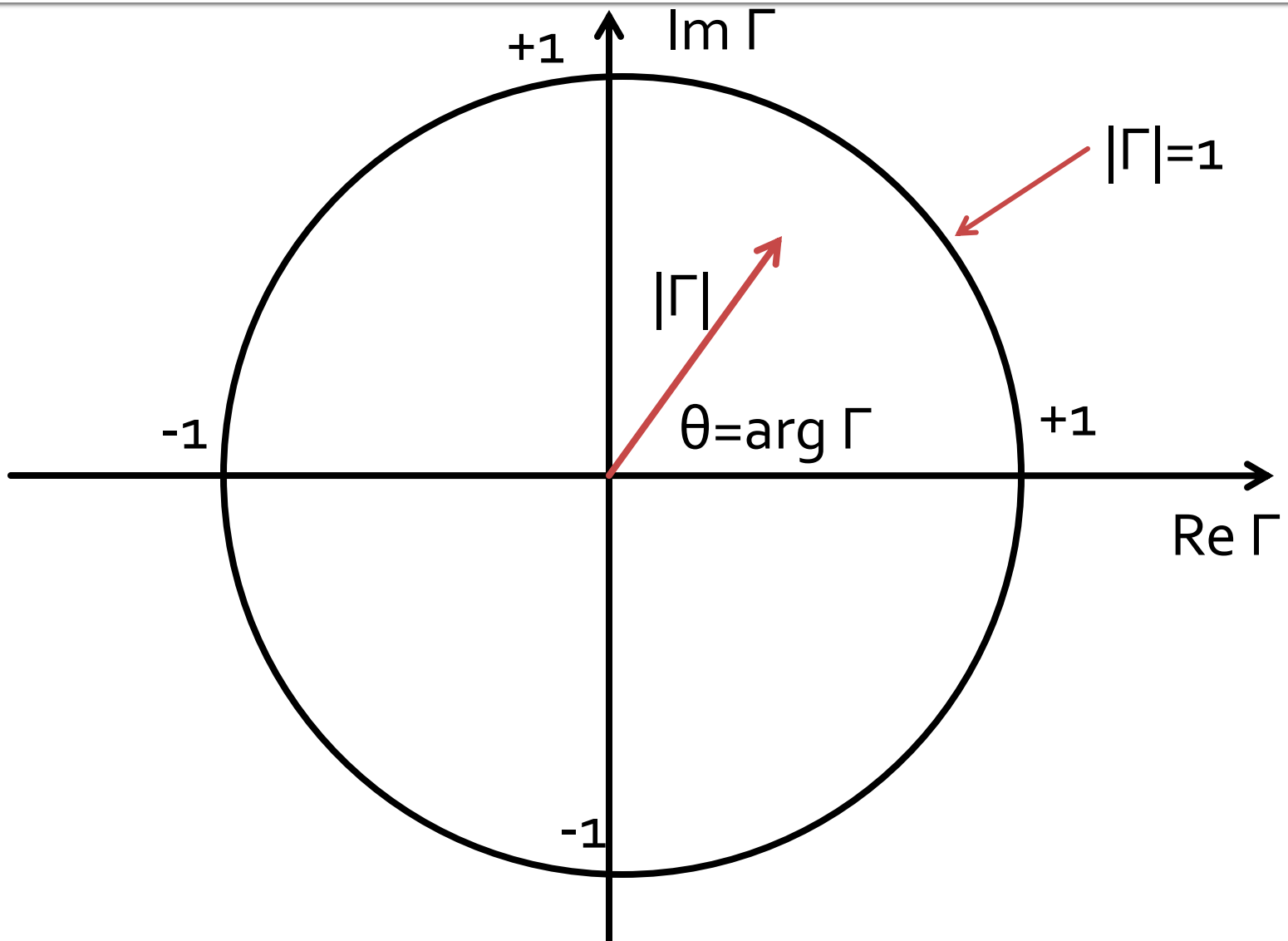

Diagrama Smith

$$\Gamma = \frac{Z_L - Z_0}{Z_L + Z_0} = \frac{z_L - 1}{z_L + 1}$$

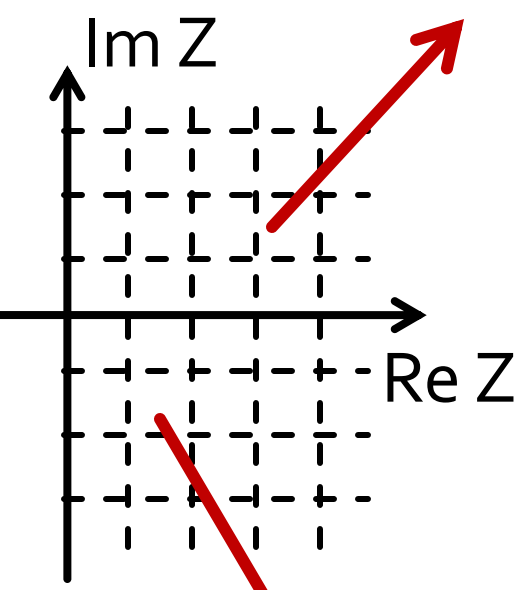

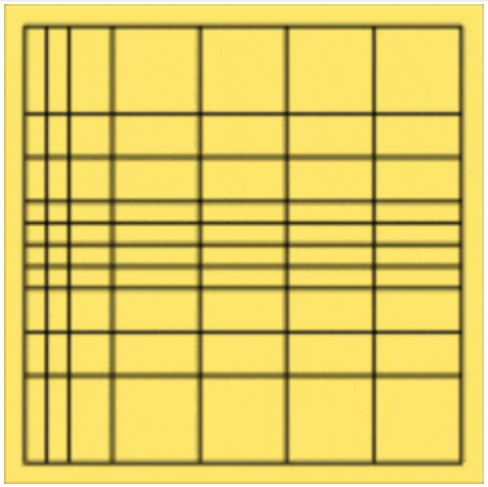

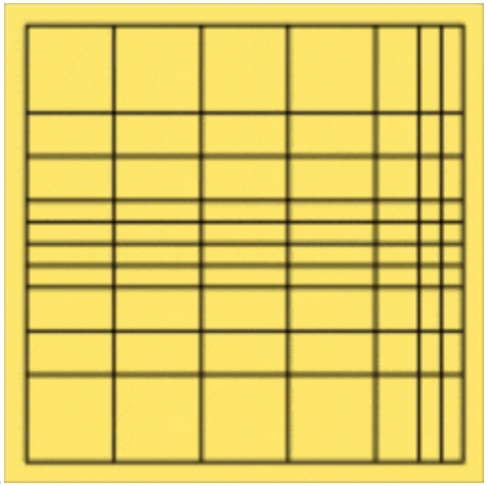

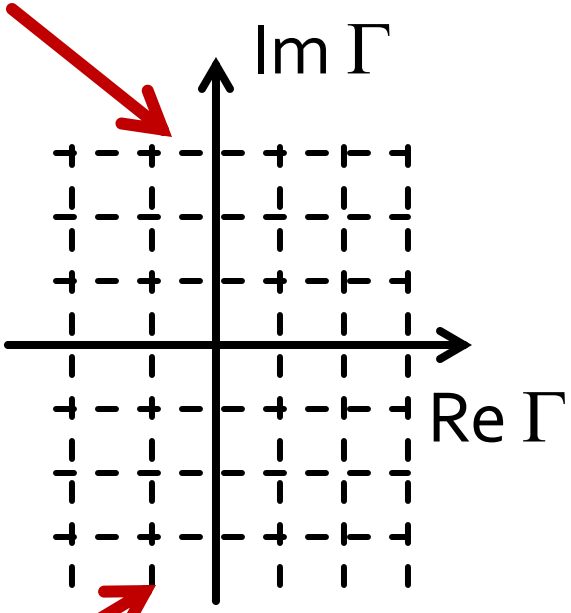

$$\Gamma = \frac{Z_L - Z_0}{Z_L + Z_0} = \frac{Y_0 - Y_L}{Y_0 + Y_L} = \frac{1 - y_L}{1 + y_L}$$

Diagrama Smith

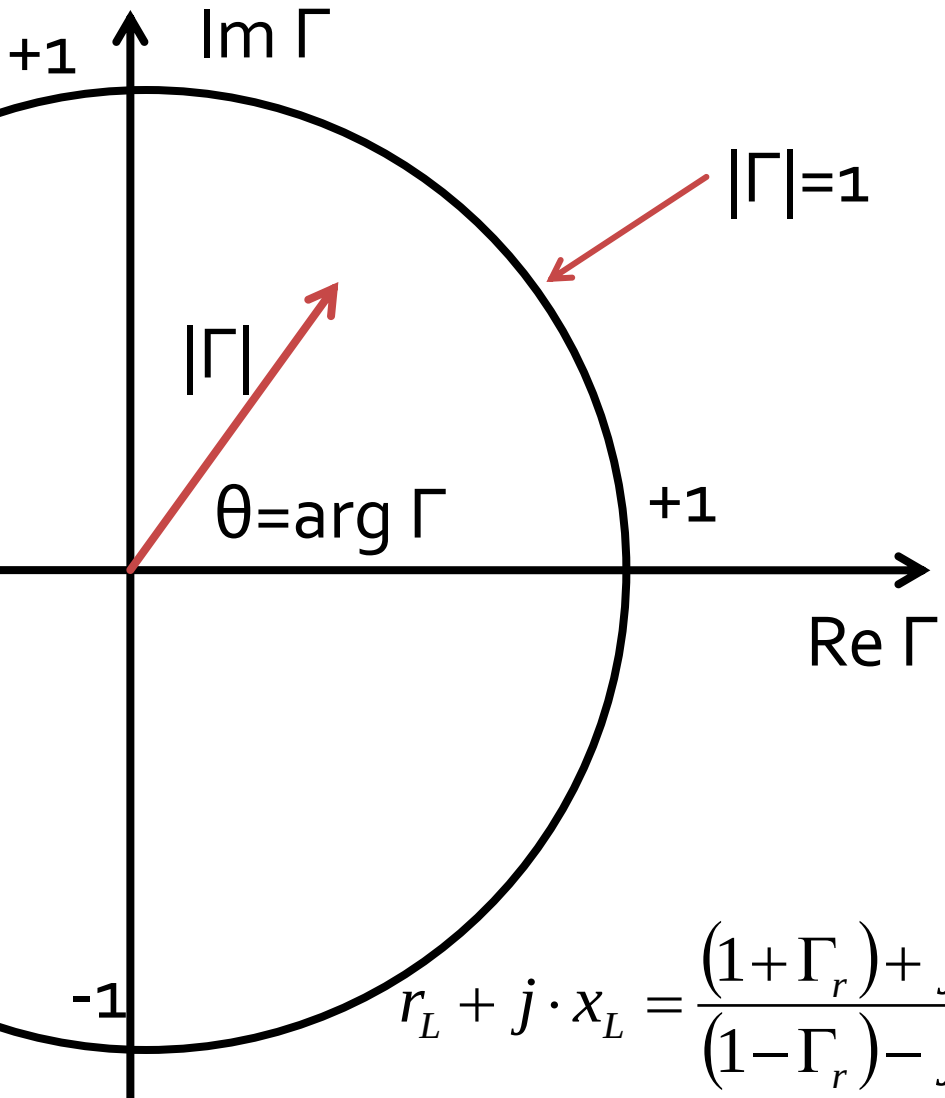

$$\Gamma = \frac{Z_L - Z_0}{Z_L + Z_0} = \frac{z_L - 1}{z_L + 1} = |\Gamma| \cdot e^{j\theta}$$

$$z_L = \frac{Z_L}{Z_0} \qquad y_L = \frac{Y_L}{Y_0} = \frac{Z_0}{Z_L}$$

Raportarea $Z_L \rightarrow z_L$ permite utilizarea aceleiasi diagrame pentru oricare impedanta de referinta Z_o (face reprezentarea independenta de valoarea aleasa pentru Z_o)

$$\Gamma = \Gamma_r + j \cdot \Gamma_i$$

$$z_L = \frac{1 + |\Gamma| \cdot e^{j\theta}}{1 - |\Gamma| \cdot e^{j\theta}} = r_L + j \cdot x_L$$

$$r_L + j \cdot x_L = \frac{(1 + \Gamma_r) + j \cdot \Gamma_i}{(1 - \Gamma_r) - j \cdot \Gamma_i} = \frac{1 - \Gamma_r^2 - \Gamma_i^2}{(1 - \Gamma_r)^2 + \Gamma_i^2} + j \cdot \frac{2 \cdot \Gamma_i}{(1 - \Gamma_r)^2 + \Gamma_i^2}$$

Diagrama Smith

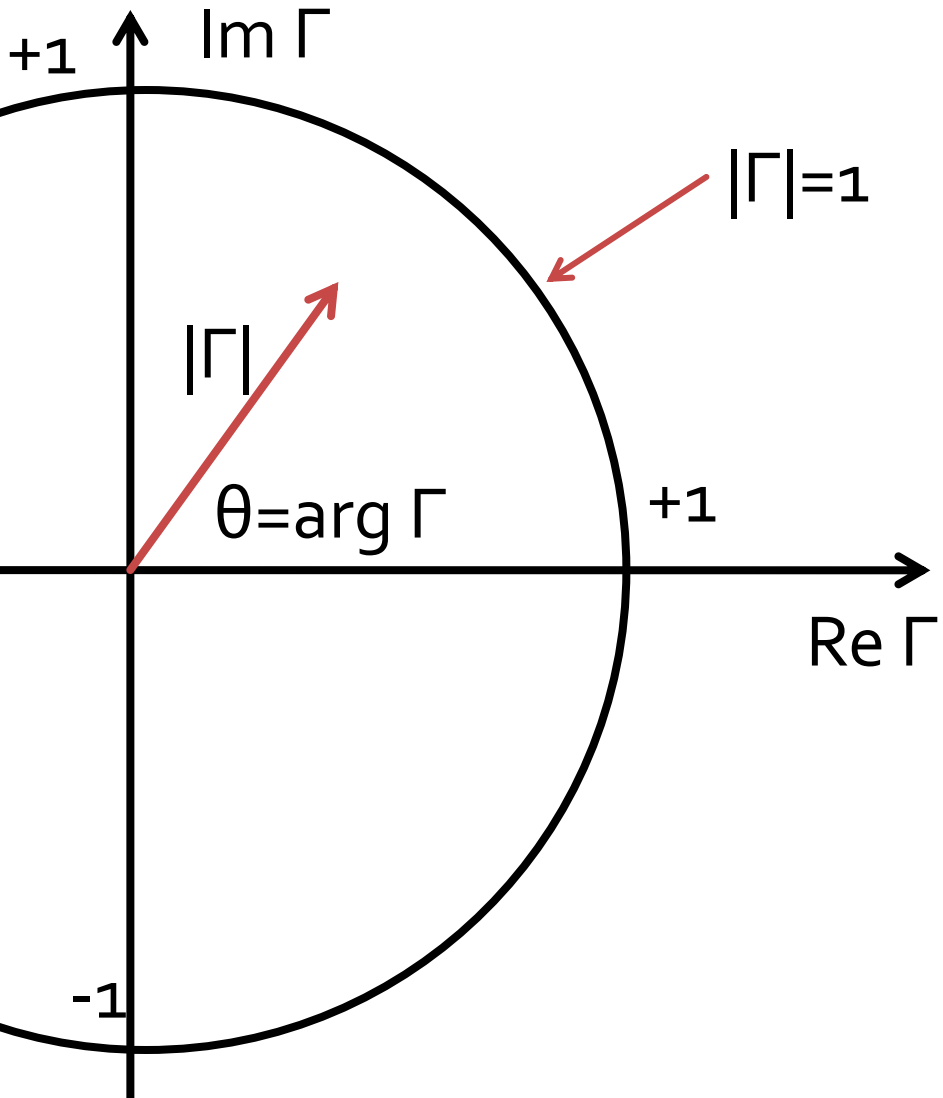

$$r_L = \frac{1-\Gamma_r^2-\Gamma_i^2}{(1-\Gamma_r)^2+\Gamma_i^2}$$

$$x_L = \frac{2\cdot\Gamma_i}{(1-\Gamma_r)^2+\Gamma_i^2}$$

- Rearajate

$$\left(\Gamma_r - \frac{r_L}{1+r_L}\right)^2 + \Gamma_i^2 = \left(\frac{1}{1+r_L}\right)^2$$

$$(\Gamma_r - 1)^2 + \left(\Gamma_i - \frac{1}{x_L}\right)^2 = \left(\frac{1}{x_L}\right)^2$$

Diagrama Smith

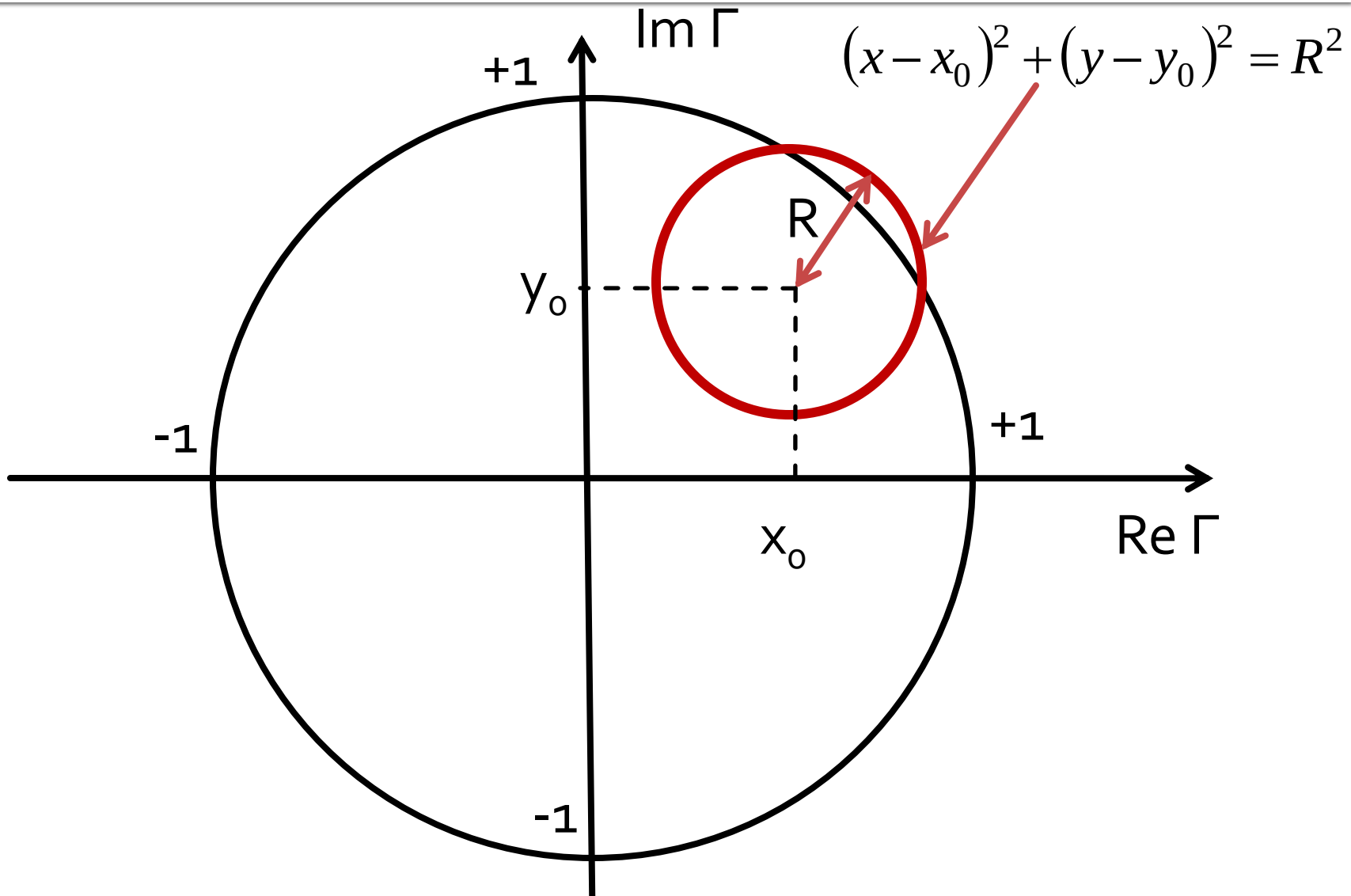

Diagrama Smith

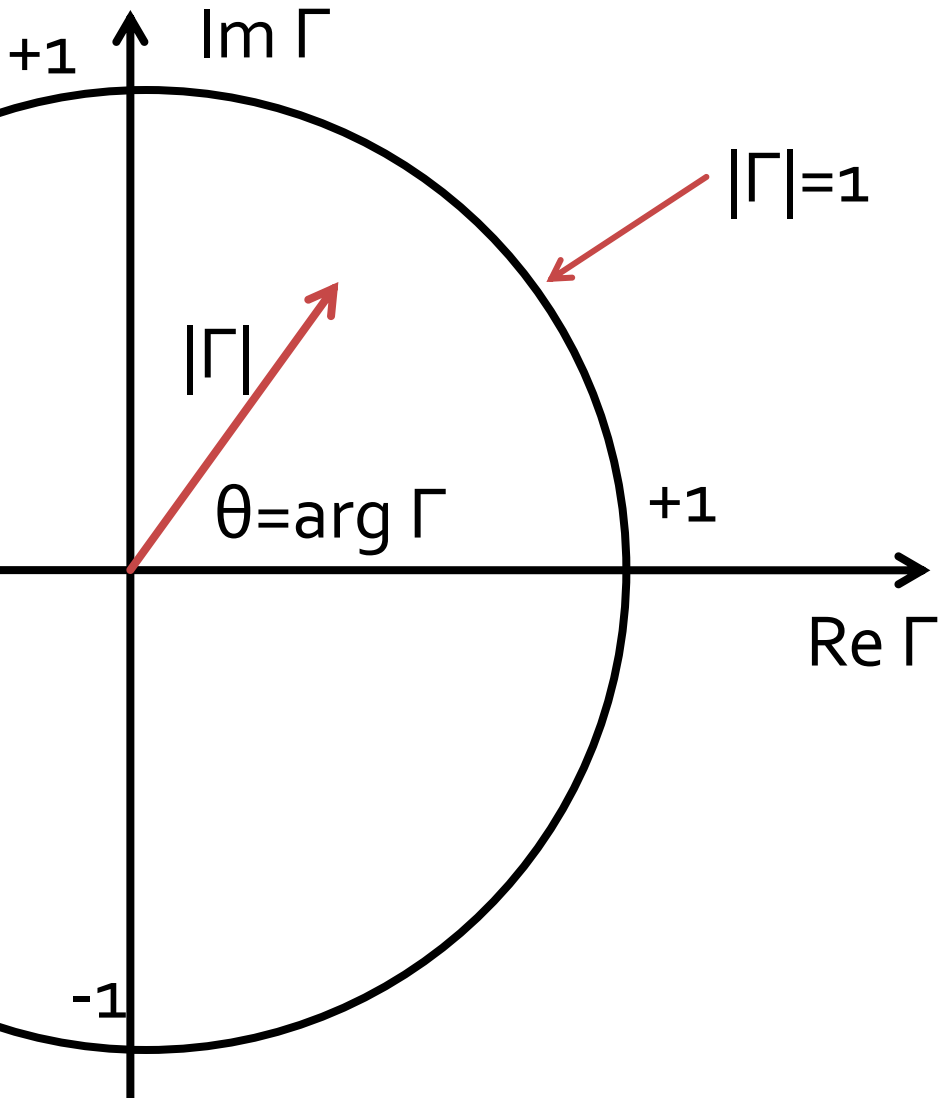

$$\left(\Gamma_r - \frac{r_L}{1+r_L}\right)^2 + \Gamma_i^2 = \left(\frac{1}{1+r_L}\right)^2$$

$$(\Gamma_r - 1)^2 + \left(\Gamma_i - \frac{1}{x_L}\right)^2 = \left(\frac{1}{x_L}\right)^2$$

- Cercuri in planul complex

$$(x - x_0)^2 + (y - y_0)^2 = R^2$$

Diagrama Smith, rezistenta

$$\left(\Gamma_r - \frac{r_L}{1+r_L}\right)^2 + \Gamma_i^2 = \left(\frac{1}{1+r_L}\right)^2$$

$$(x - x_0)^2 + (y - y_0)^2 = R^2$$

$$\begin{cases} x_0 = \dfrac{r_L}{1+r_L} \\ y_0 = 0 \\ R = \dfrac{1}{1+r_L} \end{cases}$$

- Locul geometric al punctelor care pot fi ocupate de impedantele cu rezistenta r_L este un cerc:
  - Cu **centrul pe axa reala** (y_o=o)
  - trece prin punctul **x=1,y=o** oricare x_o,r_L $\left(1 - \frac{r_L}{1+r_L}\right)^2 + 0 = \left(\frac{1}{1+r_L}\right)^2$
  - are raza intre o si 1
    - tinzand spre o cand r_L este mare
    - tinzand spre 1 cand r_L este mic
  - cand r_L este **1** trece si prin **origine** $\left(0 - \frac{r_L}{1+r_L}\right)^2 = \left(\frac{1}{1+r_L}\right)^2 \leftrightarrow r_L = 1$

Diagrama Smith, rezistenta

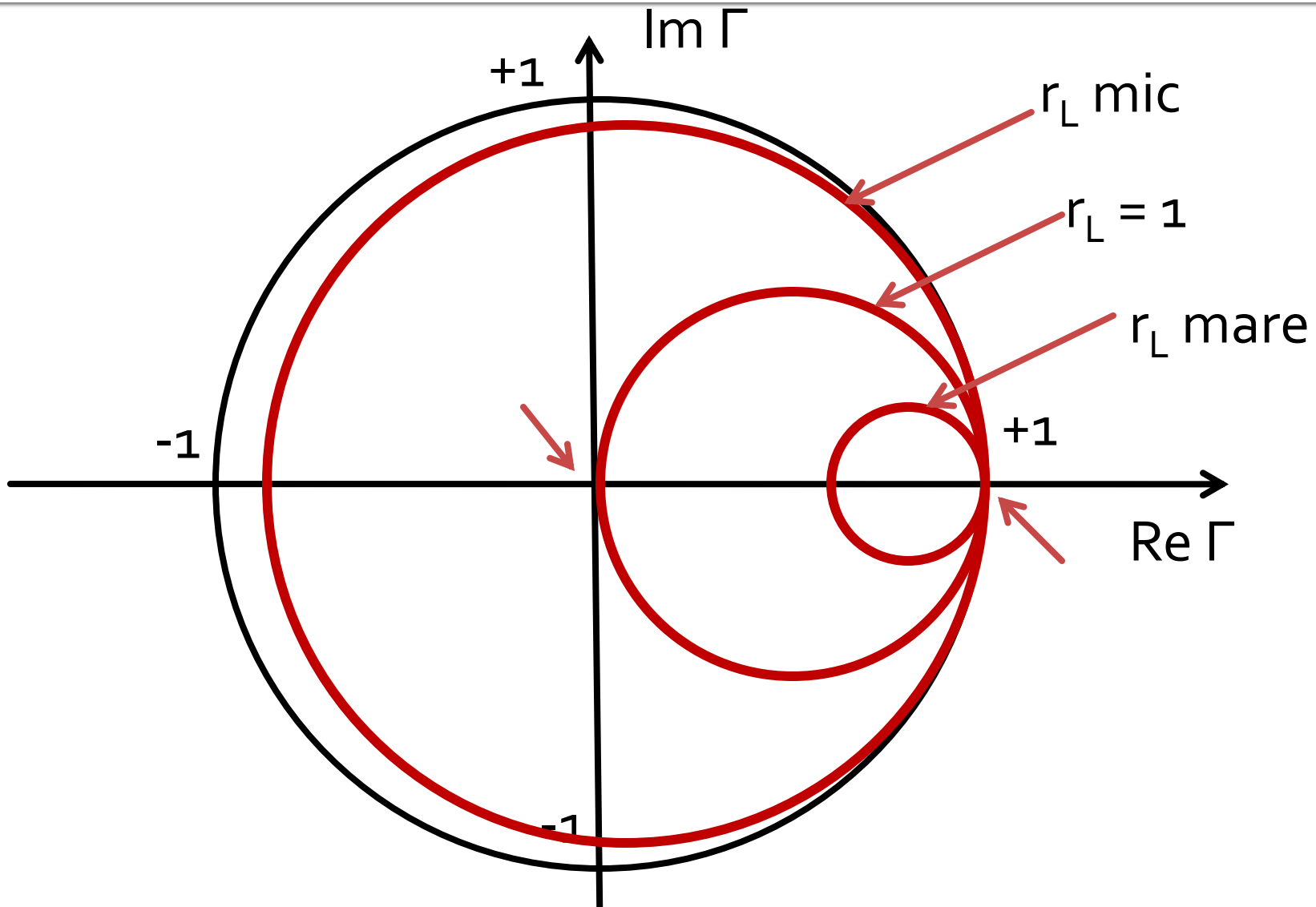

Diagrama Smith, reactanta

$$(\Gamma_r - 1)^2 + \left(\Gamma_i - \frac{1}{x_L}\right)^2 = \left(\frac{1}{x_L}\right)^2$$

$$(x - x_0)^2 + (y - y_0)^2 = R^2$$

$$\begin{cases} x_0 = 1 \\ y_0 = \dfrac{1}{x_L} \\ R = \dfrac{1}{x_L} \end{cases}$$

- Locul geometric al punctelor care pot fi ocupate de impedantele cu reactanta x_L este un cerc:
  - Cu **centrul pe o dreapta paralela cu axa imaginara** (x_0=1)
  - trece prin punctul **x=1,y=0** oricare x_0,x_L
  - are raza intre 0 si ∞
    - tinzand spre 0 cand $|x_L|$ este mare
    - tinzand spre ∞ cand $|x_L|$ este mic
  - cand x_L este **0**, la limita se transforma in **axa reala**
  - daca x_L > 0 cercul e deasupra axei reale, altfel e sub axa reala

$$0 + \left(0 - \frac{1}{x_L}\right)^2 = \left(\frac{1}{x_L}\right)^2$$

Diagrama Smith, reactanta

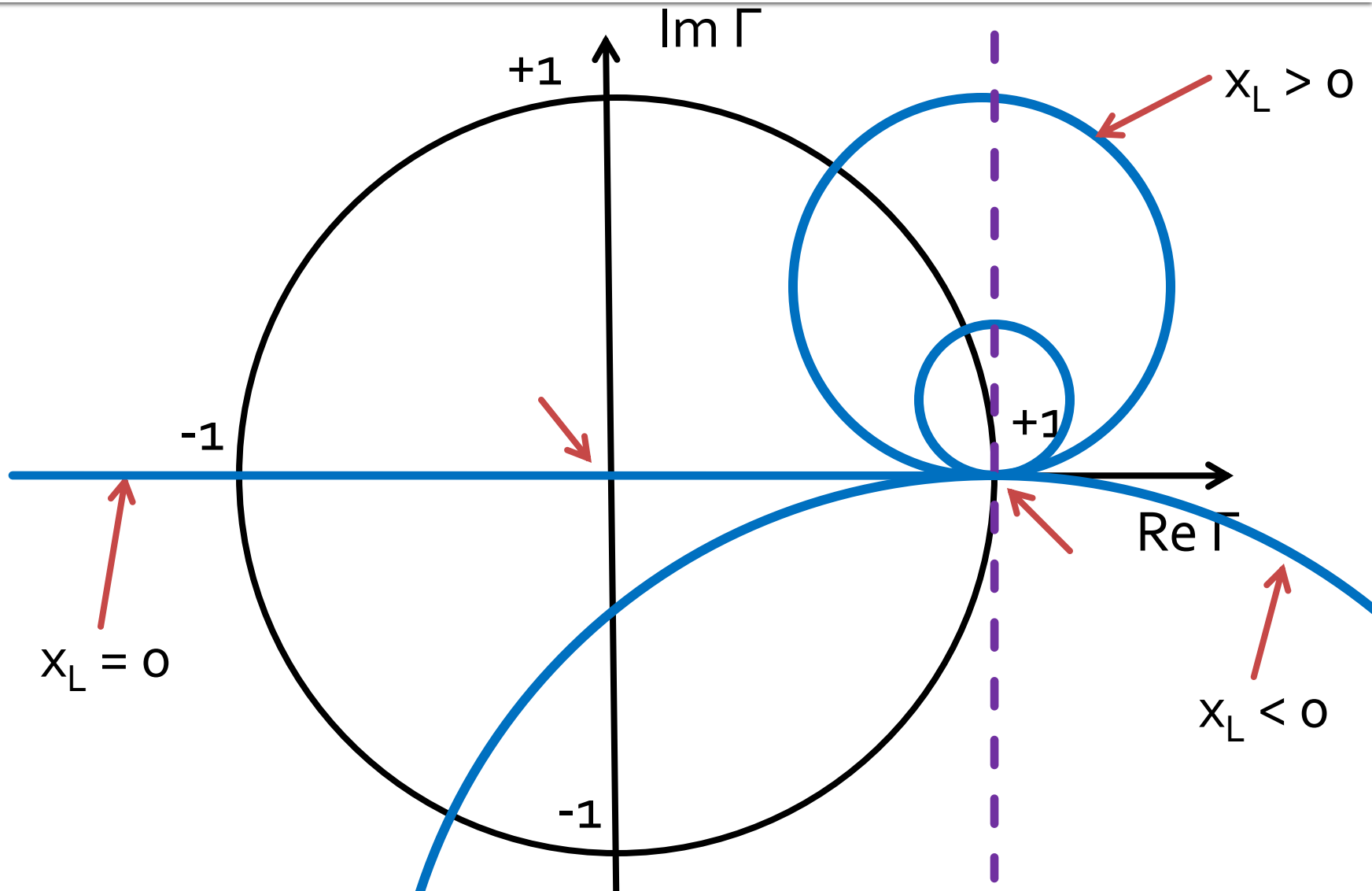

Diagrama Smith, impedanta

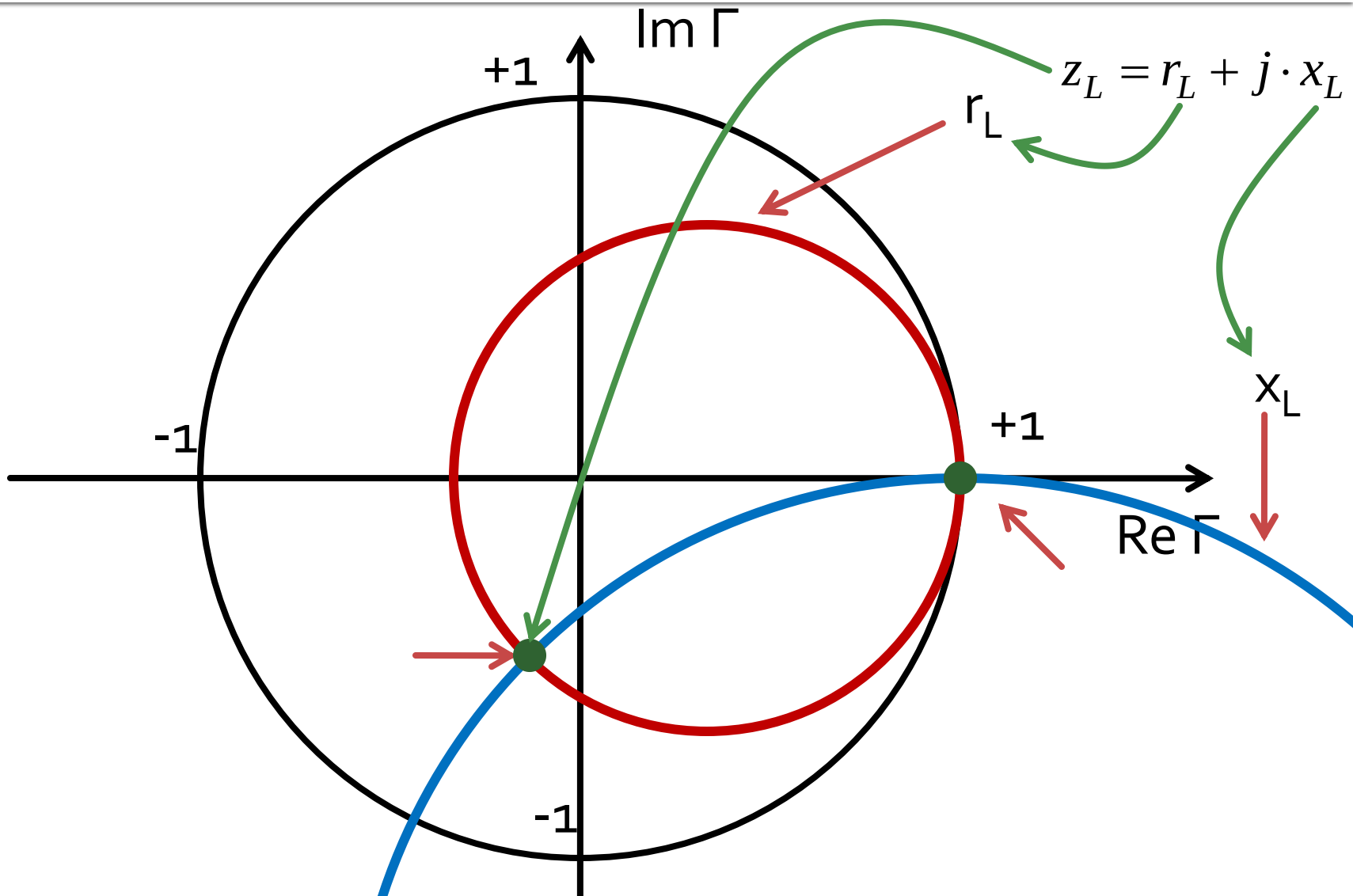

Diagrama Smith, coeficient de reflexie, coordonate rectangulare

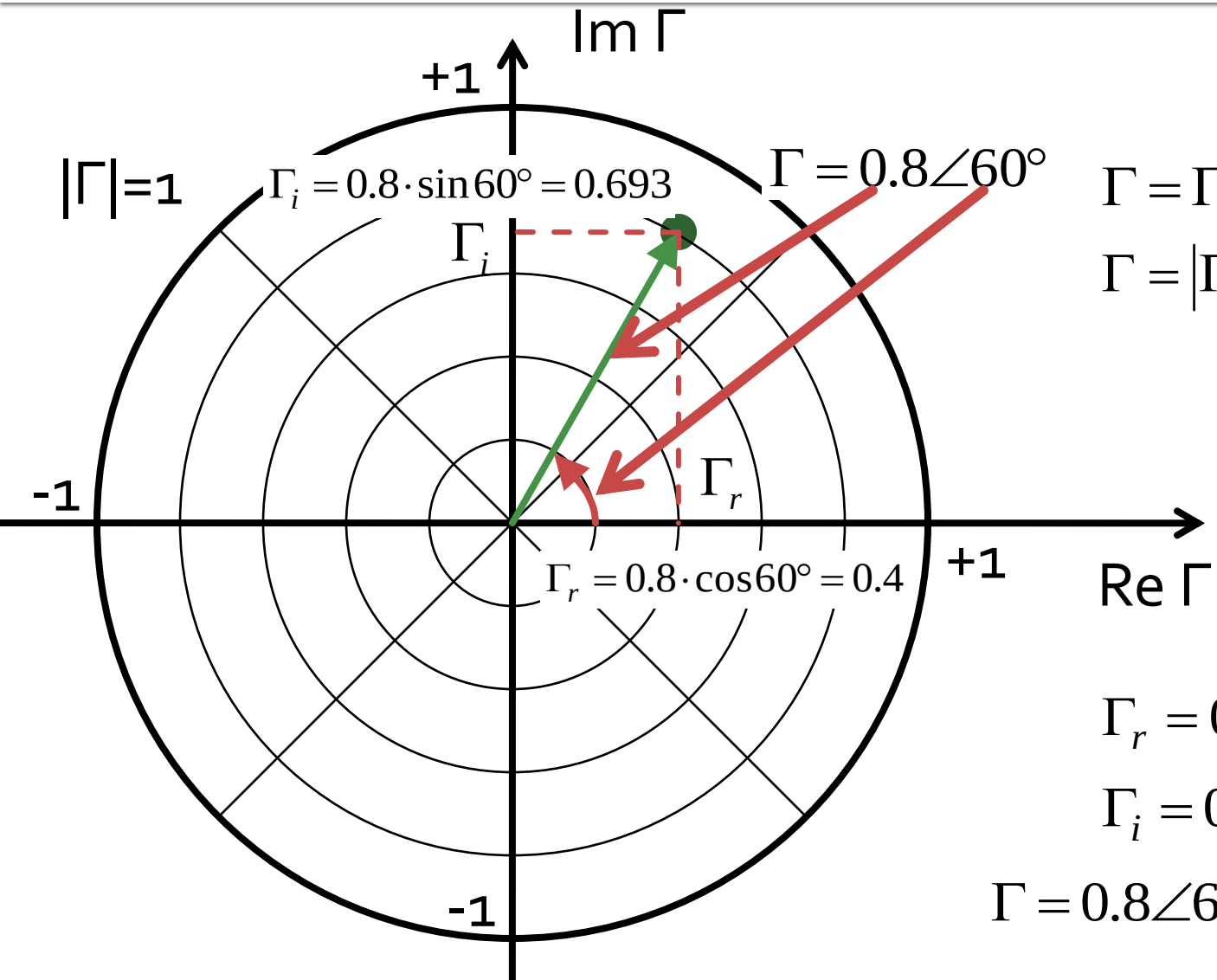

$$\Gamma = \Gamma_r + j \cdot \Gamma_i$$

$$\Gamma = |\Gamma| \cdot (\cos\theta + j \cdot \sin\theta)$$

$$\Gamma = |\Gamma| \cdot e^{j\theta}$$

$$\Gamma = |\Gamma| \angle \theta°$$

$$\Gamma = 0.8\angle 60°$$

$$\Gamma_r = 0.8 \cdot \cos 60° = 0.4$$

$$\Gamma_i = 0.8 \cdot \sin 60° = 0.693$$

$$\Gamma = 0.8\angle 60° = 0.4 + j \cdot 0.693$$

Diagrama Smith, coeficient de reflexie, coordonate polare

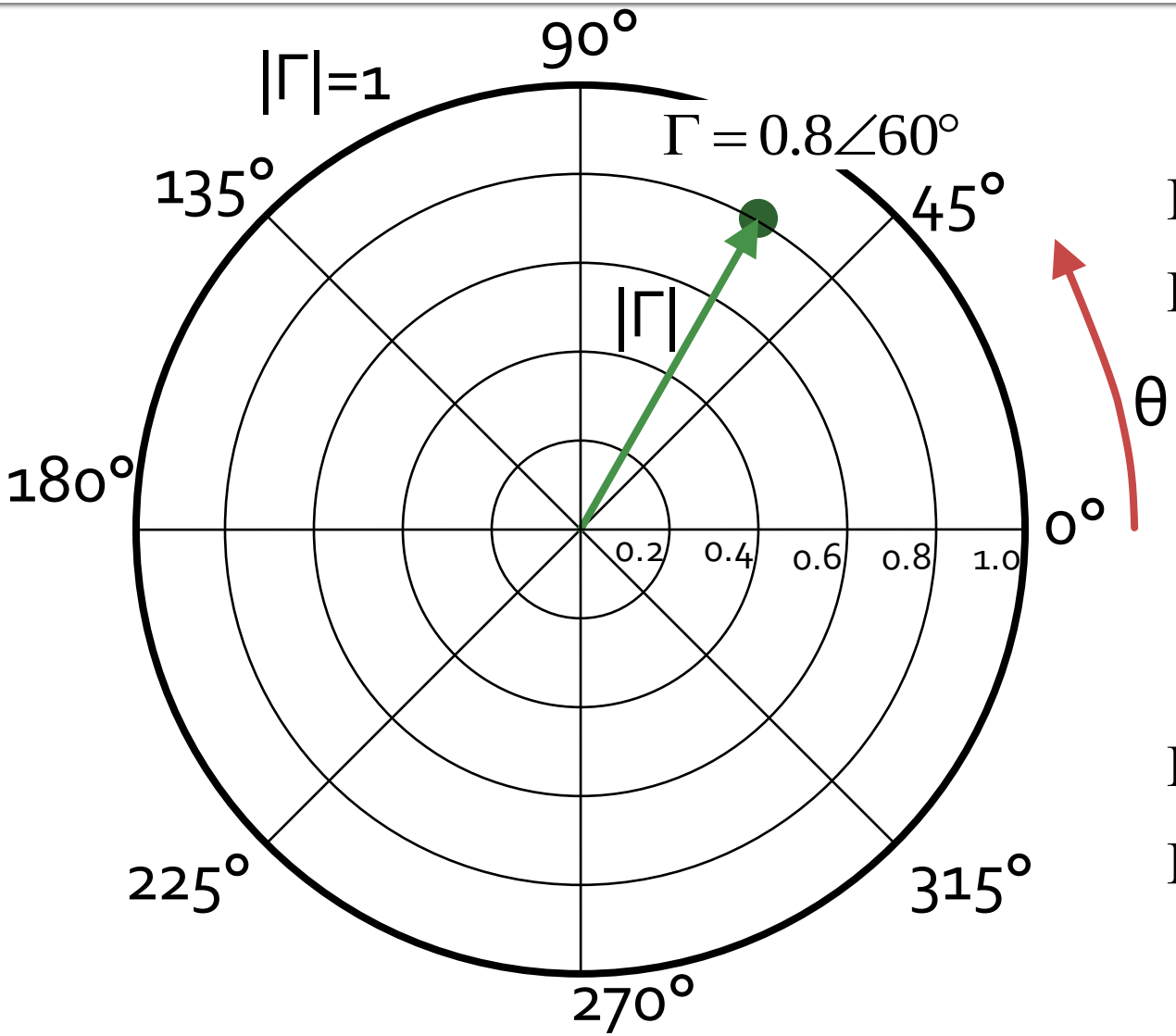

$$\Gamma = \Gamma_r + j \cdot \Gamma_i$$

$$\Gamma = |\Gamma| \cdot (\cos\theta + j \cdot \sin\theta)$$

$$\Gamma = |\Gamma| \cdot e^{j\theta}$$

$$\Gamma = |\Gamma| \angle \theta^\circ$$

$$\Gamma = 0.8 \angle 60^\circ$$

$$\Gamma_r = 0.8 \cdot \cos 60^\circ = 0.4$$

$$\Gamma_i = 0.8 \cdot \sin 60^\circ = 0.693$$

Diagrama Smith, coeficient de reflexie, impedanta

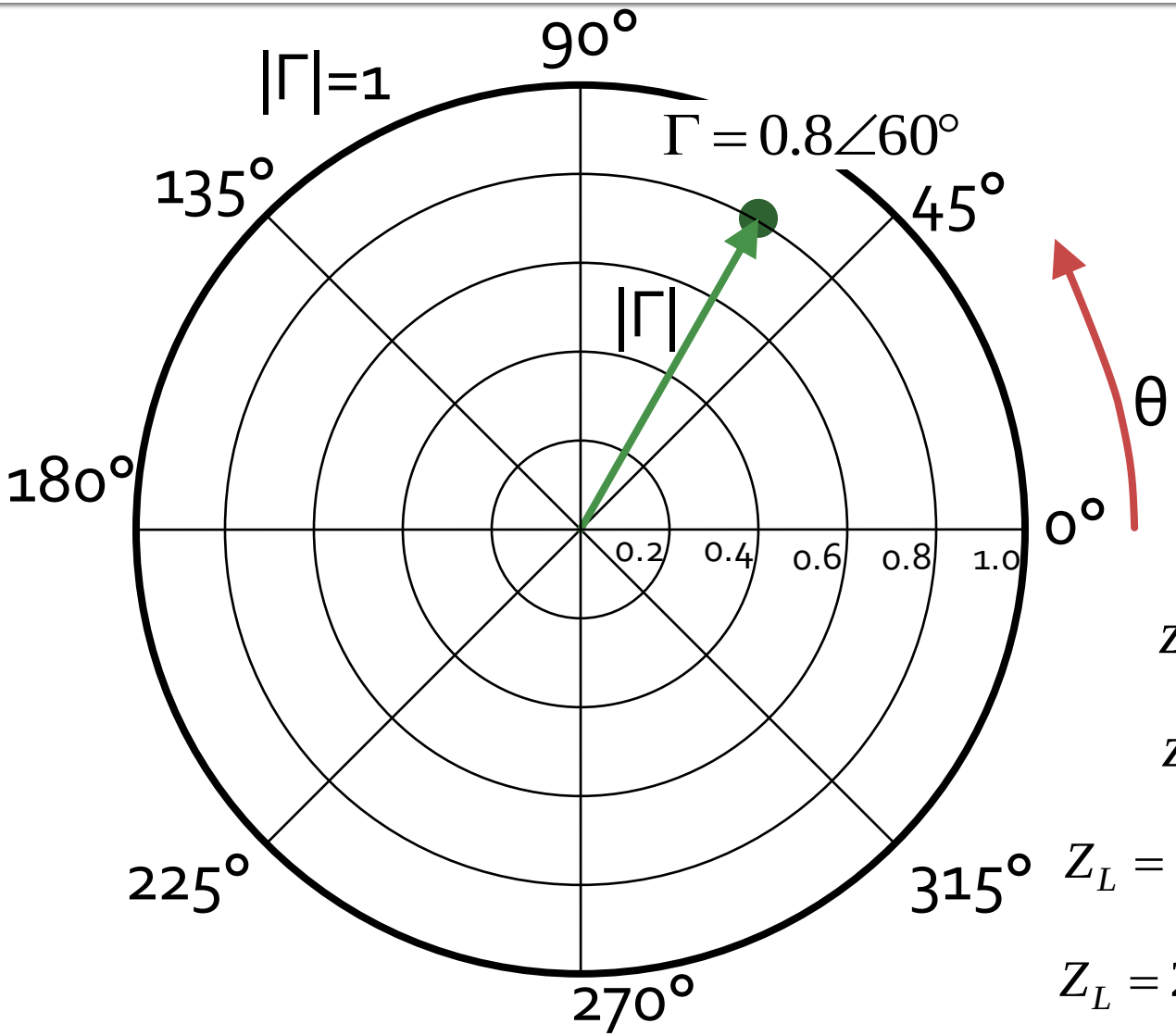

$$\Gamma = |\Gamma| \cdot e^{j\theta}$$

$$\Gamma = |\Gamma| \angle \theta°$$

$$\Gamma = 0.8 \angle 60°$$

$$\Gamma = \frac{Z_L - Z_0}{Z_L + Z_0} = \frac{z_L - 1}{z_L + 1}$$

$$z_L = \frac{1+\Gamma}{1-\Gamma} = \frac{1+0.8\angle 60°}{1-0.8\angle 60°}$$

$$z_L = 0.429 + j \cdot 1.65$$

$$Z_L = Z_0 \cdot \frac{1+\Gamma}{1-\Gamma} = 50\Omega \cdot \frac{1+0.8\angle 60°}{1-0.8\angle 60°}$$

$$Z_L = 21.429\Omega + j \cdot 82.479\Omega$$

Echivalenta
coeficient de reflexie ⇔impedanta

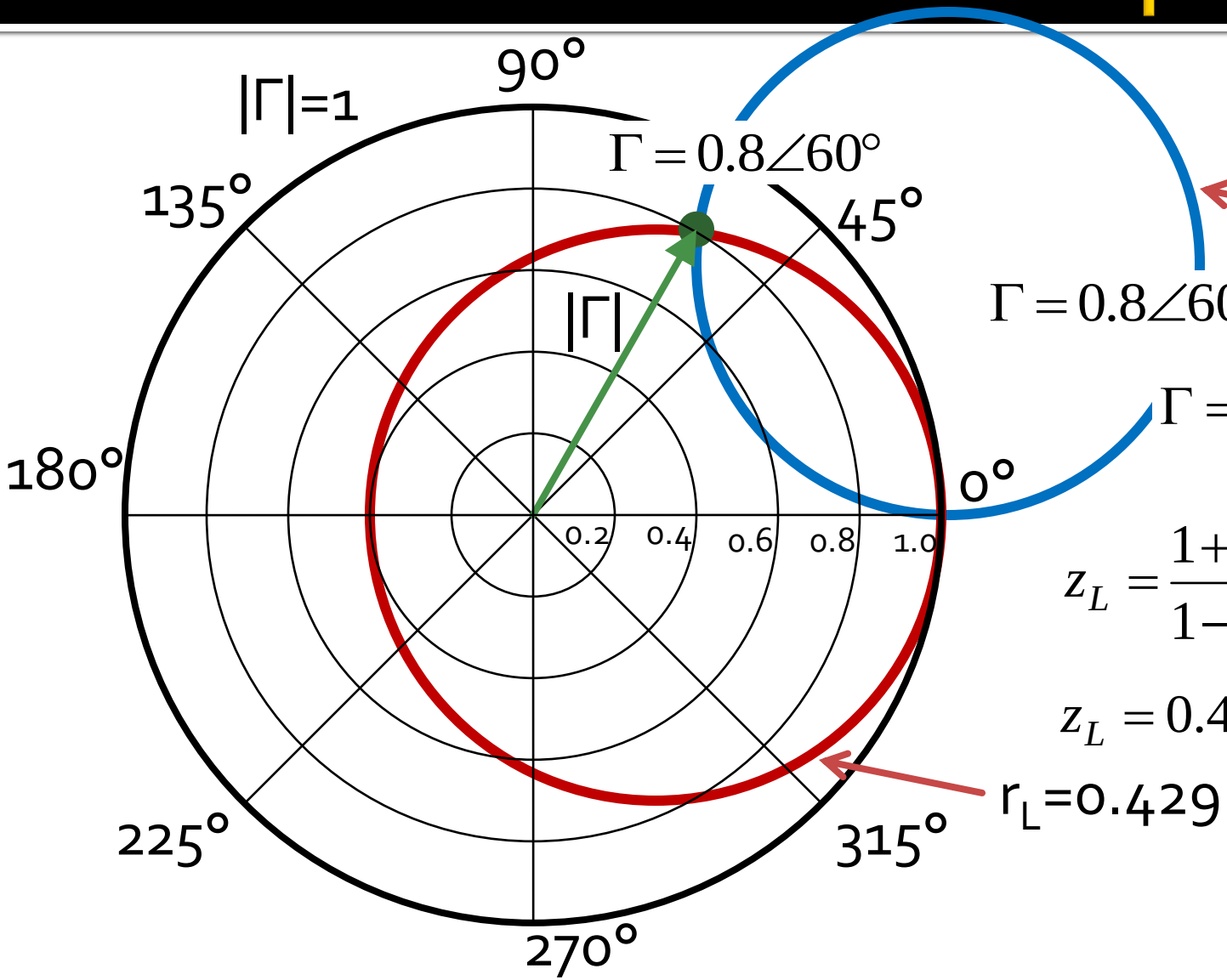

$$\Gamma = 0.8\angle 60° = 0.4 + j \cdot 0.693$$

$$\Gamma = \frac{Z_L - Z_0}{Z_L + Z_0} = \frac{z_L - 1}{z_L + 1}$$

$$z_L = \frac{1+\Gamma}{1-\Gamma} = \frac{1+0.8\angle 60°}{1-0.8\angle 60°}$$

$$z_L = 0.429 + j \cdot 1.65$$

(oricare Z_0)

Diagrama Smith, coeficient de reflexie ←→ impedanta

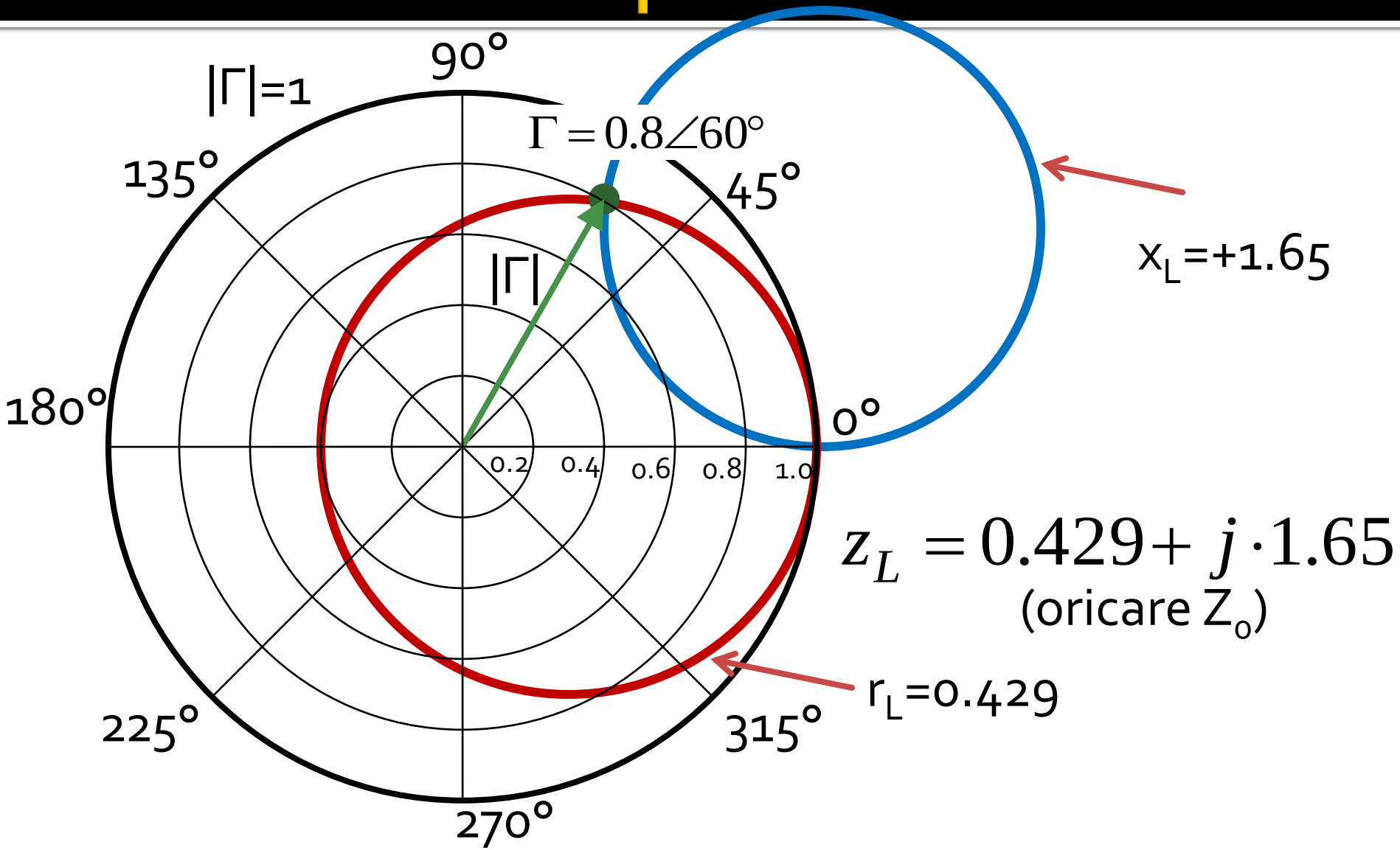

$$z_L = 0.429 + j \cdot 1.65$$

(oricare Z_0)

Diagrama Smith, coeficient de reflexie, adaptare

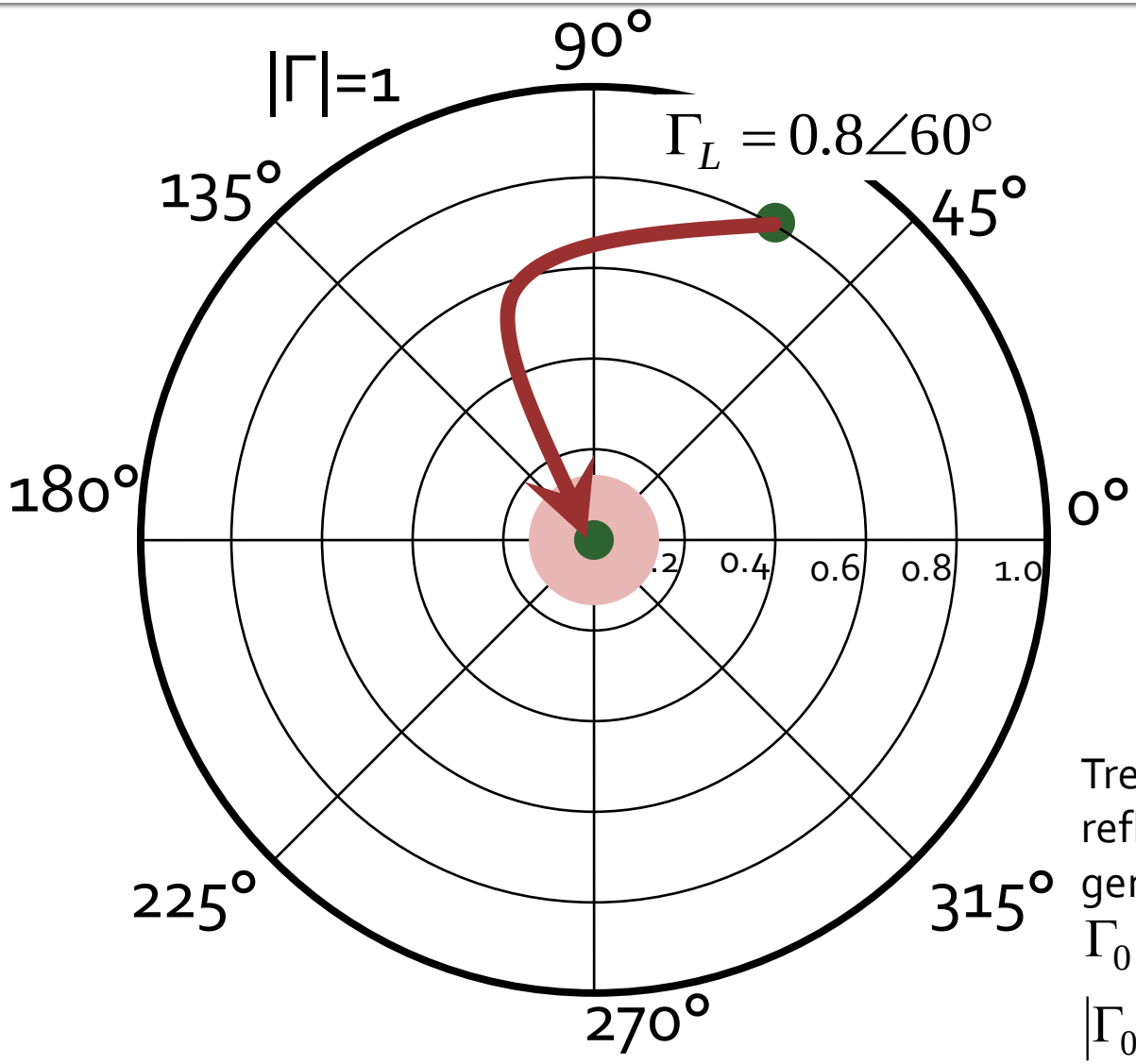

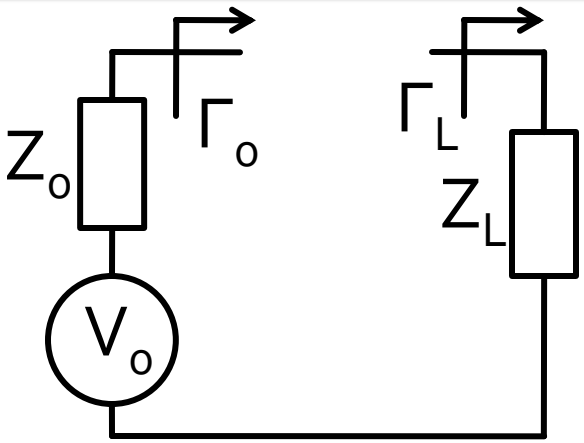

Adaptare Z_L la Z_0. Se raporteaza Z_L la Z_0

$$Z_L = 21.429\Omega + j \cdot 82.479\Omega$$

$$z_L = 0.429 + j \cdot 1.65$$

$$\Gamma_L = 0.8\angle 60°$$

Trebuie sa deplasez coeficientul de reflexie in zona in care pentru generator cu Z_0 am:

$\Gamma_0 = 0$ adaptare perfecta

$|\Gamma_0| \le \Gamma_m$ adaptare "suficienta"

Simulare

- Similar Lab. 1

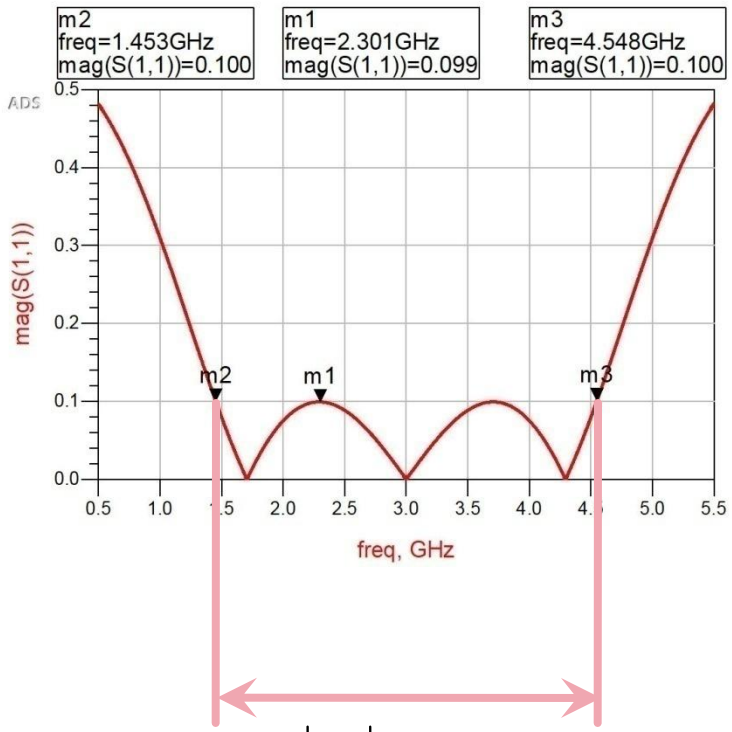

$$|\Gamma_0| \le \Gamma_m$$

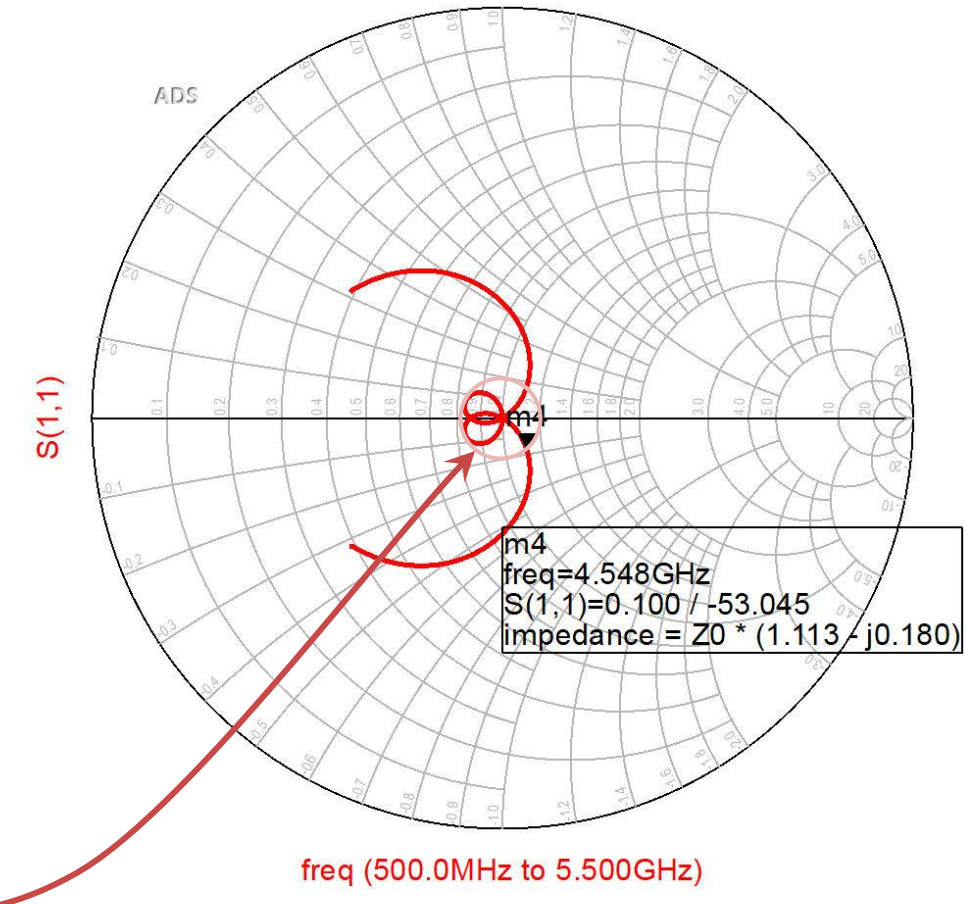

Simulare

- Similar Lab. 1

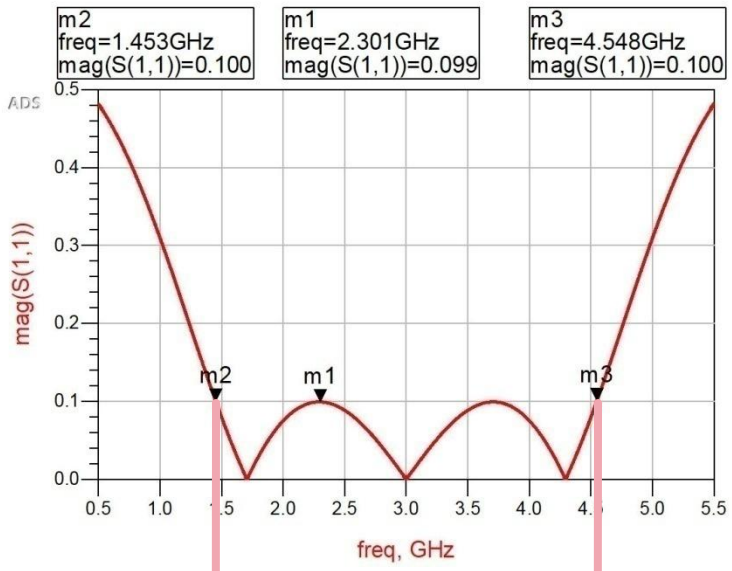

$$|\Gamma_0| \le \Gamma_m$$

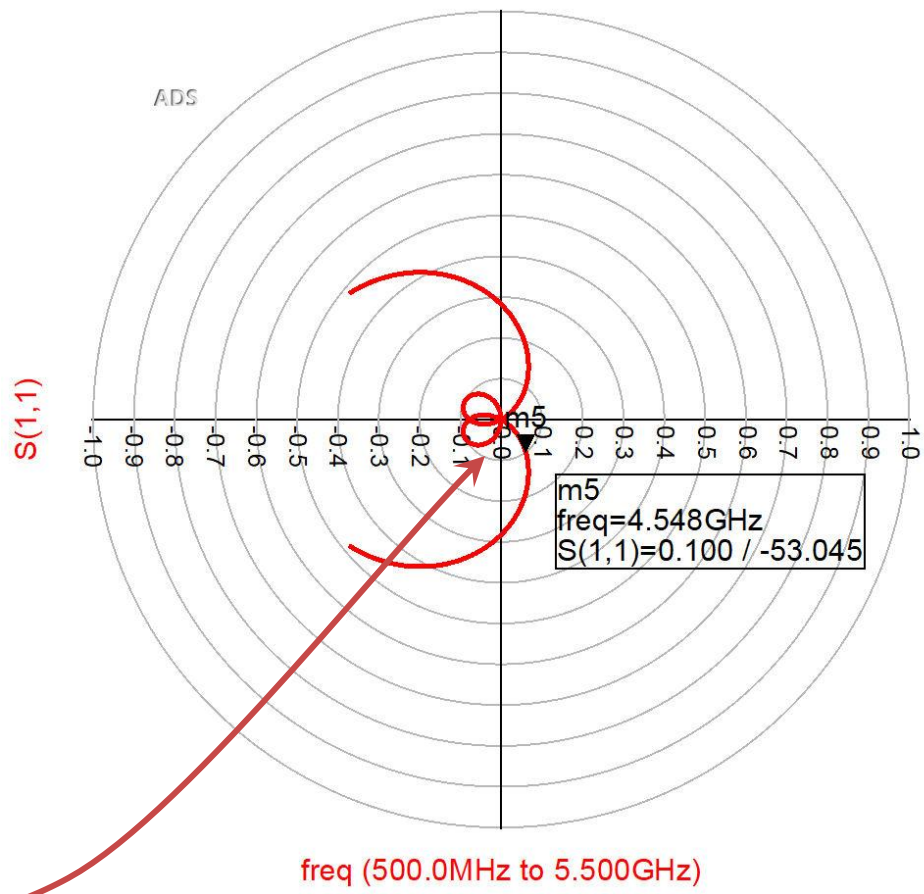

Diagrama Smith, coeficient de reflexie

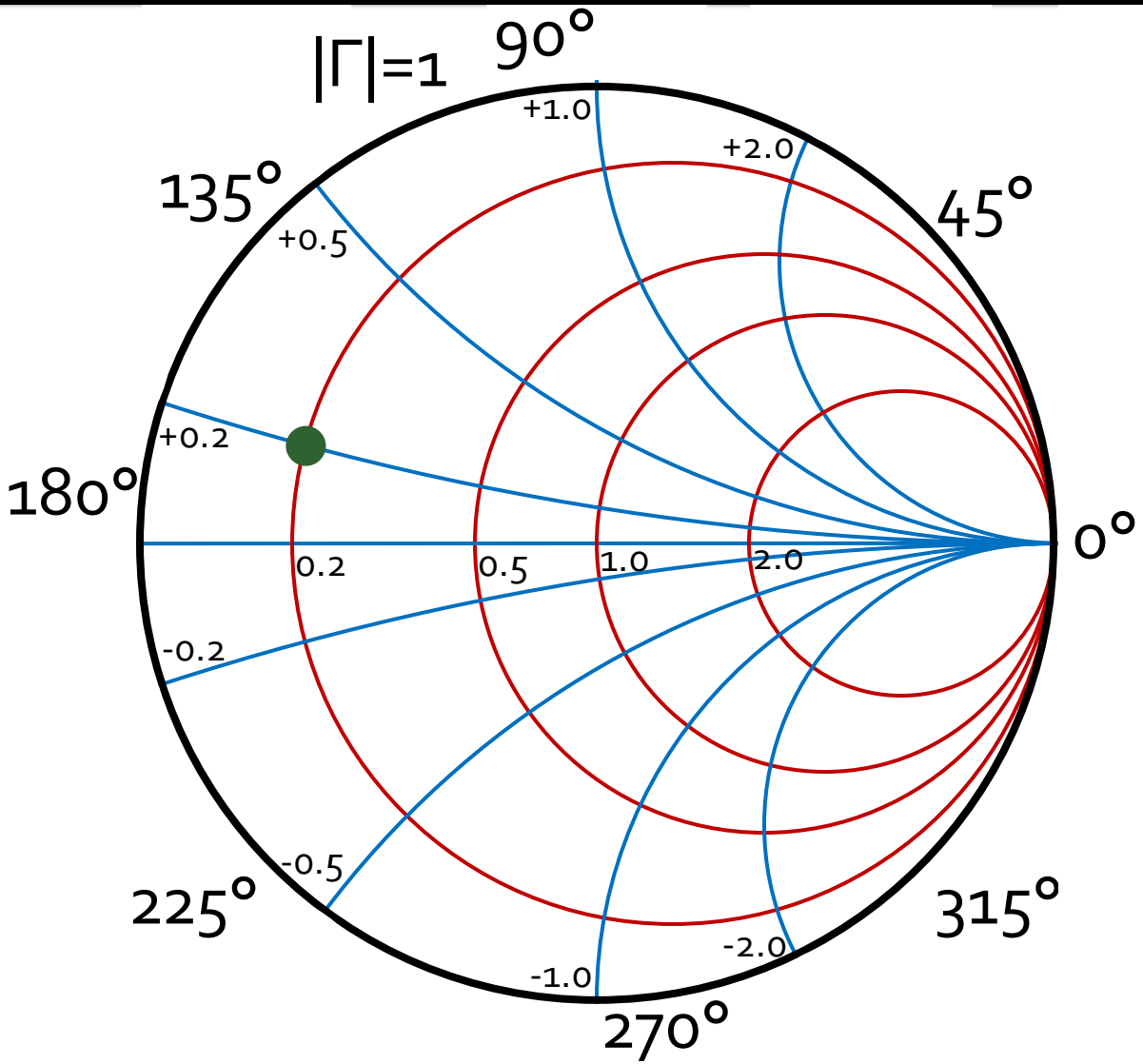

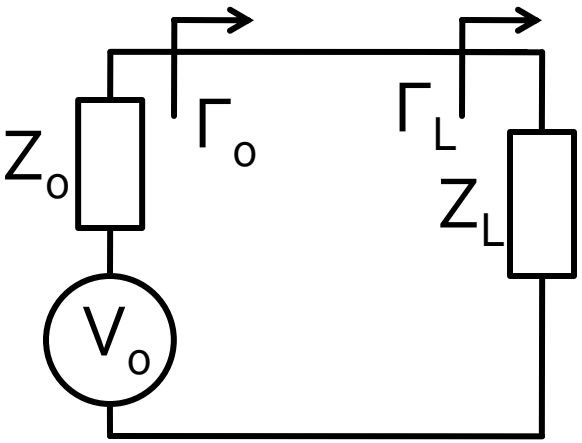

$$Z_0 = 50\Omega$$
$$Z_L = 10\Omega + j \cdot 10\Omega$$
$$z_L = 0.2 + j \cdot 0.2$$
$$\Gamma_L = \Gamma_0 = 0.678\angle 156.5$$

Diagrama Smith, coeficient de reflexie, reactanta in serie

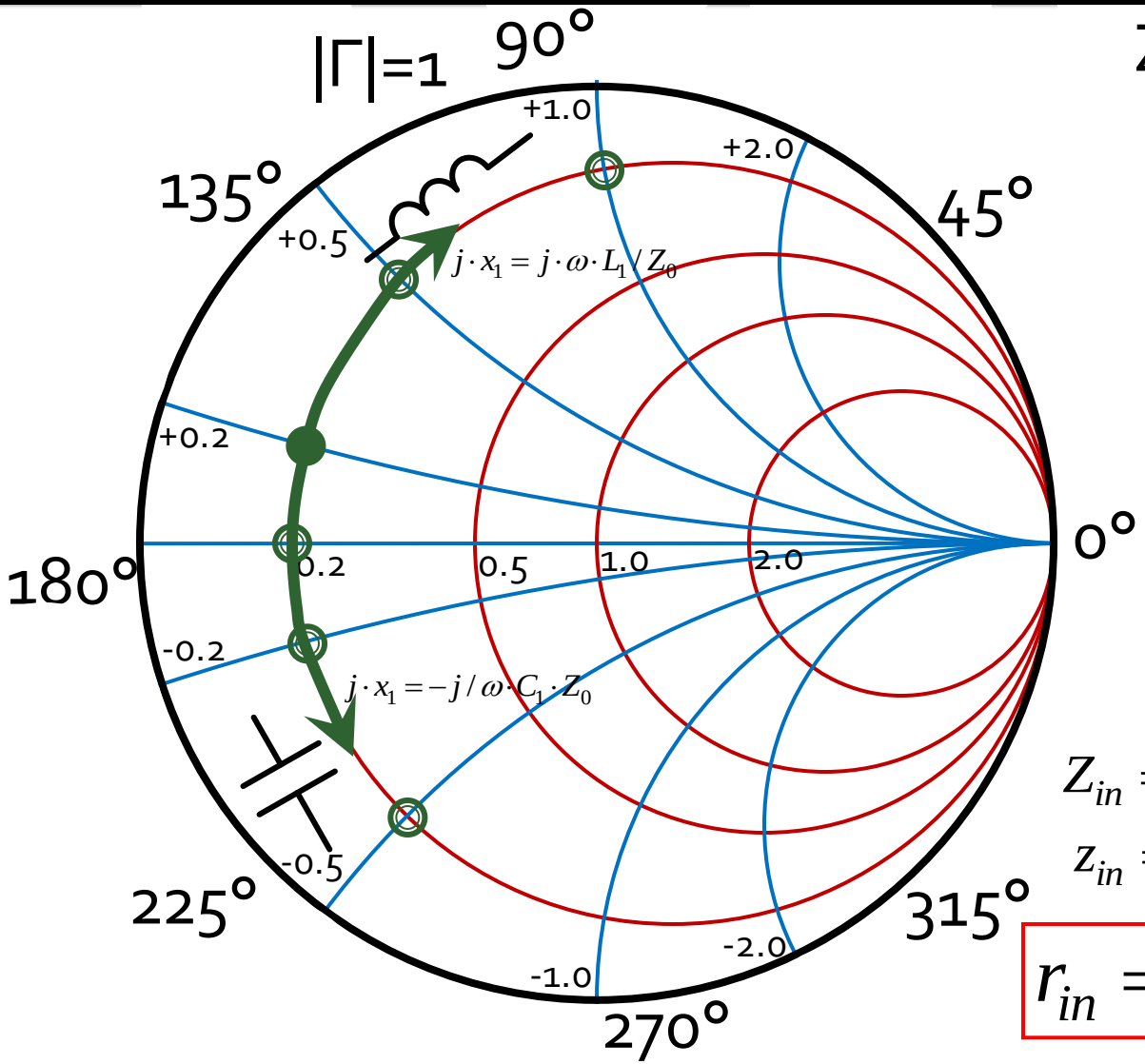

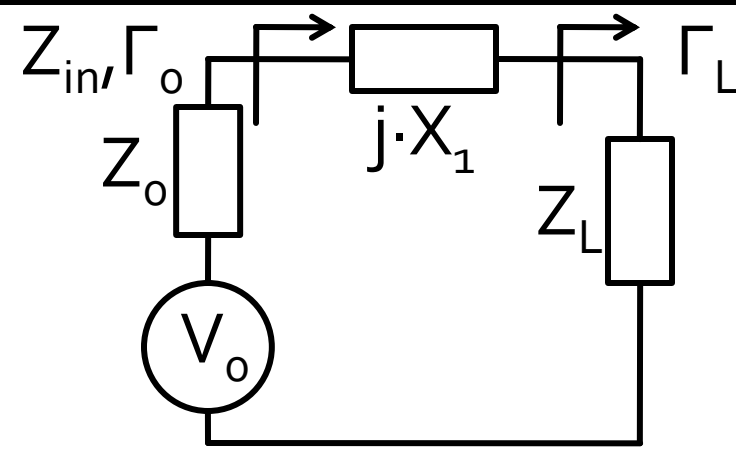

$$Z_0 = 50\Omega$$

$$Z_L = R_L + j \cdot X_L = 10\Omega + j \cdot 10$$

$$z_L = r_L + j \cdot x_L = 0.2 + j \cdot 0.2$$

$$\Gamma_L = 0.678\angle 156.5°$$

$$Z_{in} = Z_L + j \cdot X_1 = R_L + j \cdot (X_L + X_1$$

$$z_{in} = r_L + j \cdot (x_L + x_1)$$

$$\boxed{r_{in} = r_L}$$

$$j \cdot x_1 = j \cdot \omega \cdot L_1 / Z_0 > 0$$

$$j \cdot x_1 = -j / \omega \cdot C_1 \cdot Z_0 < 0$$

ADS, Diagrama Smith, reactanta in serie

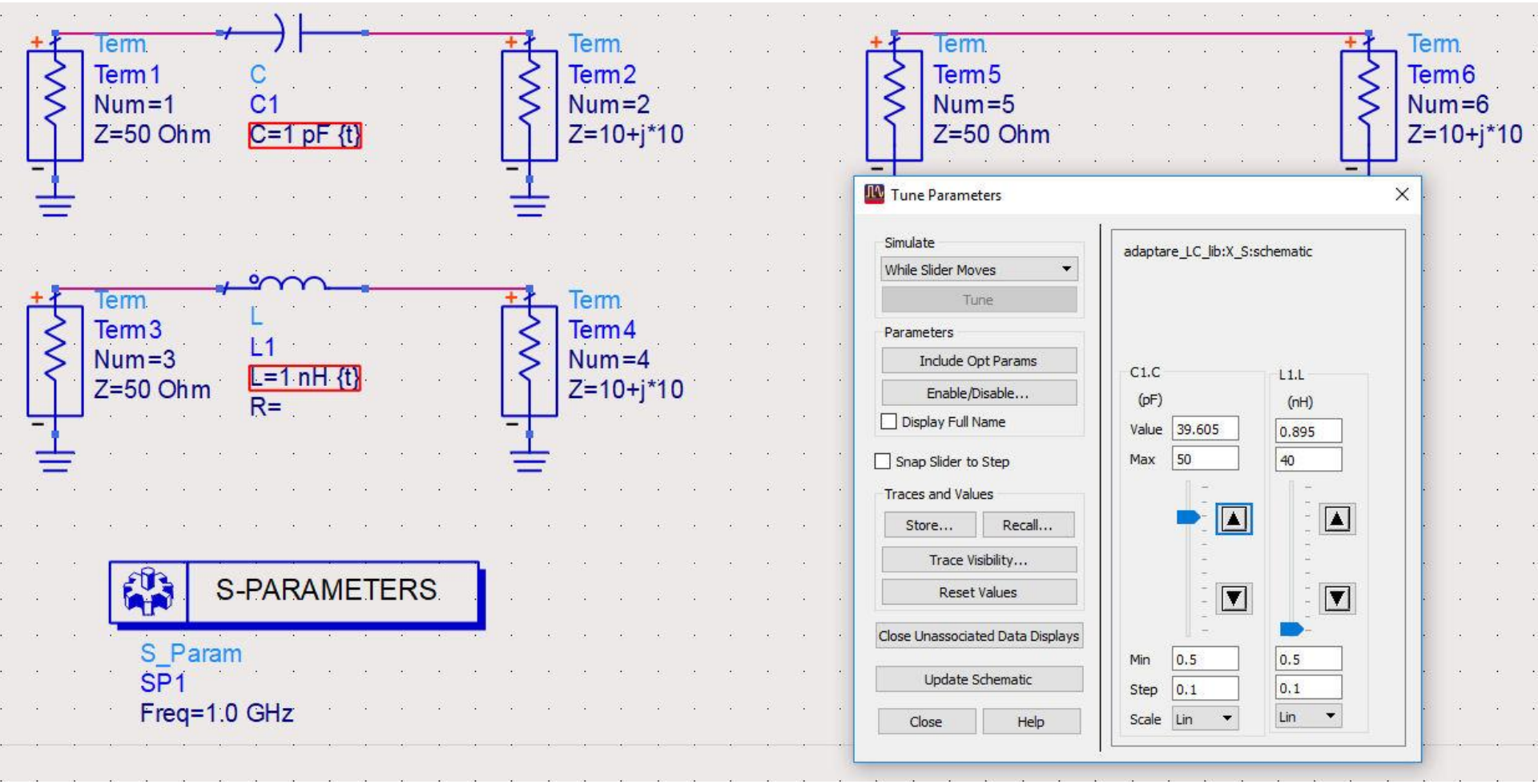

ADS, Diagrama Smith, reactanta in serie

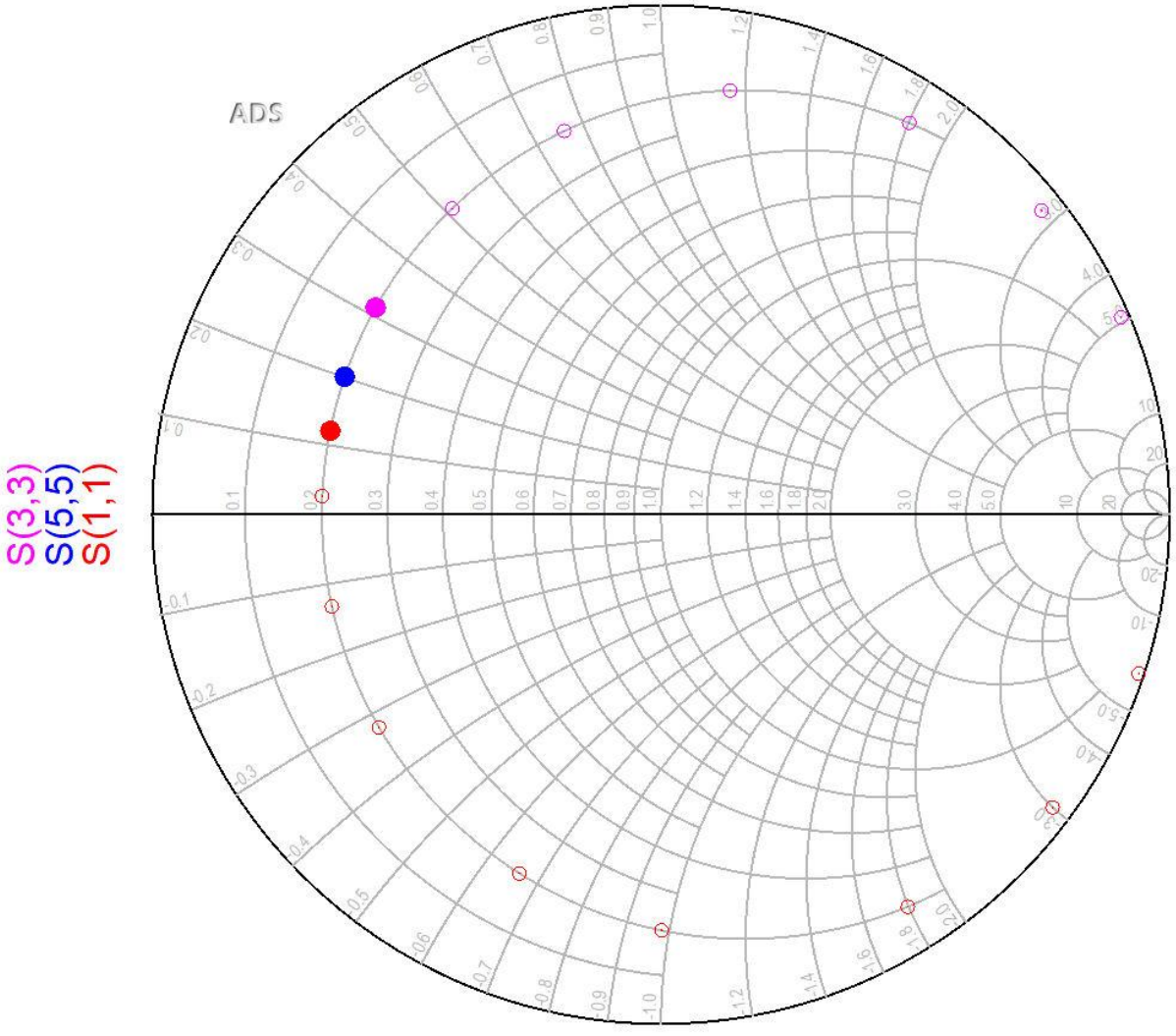

freq (1.000GHz to 1.000GHz)

Diagrama Smith, coeficient de reflexie, rezistenta in serie

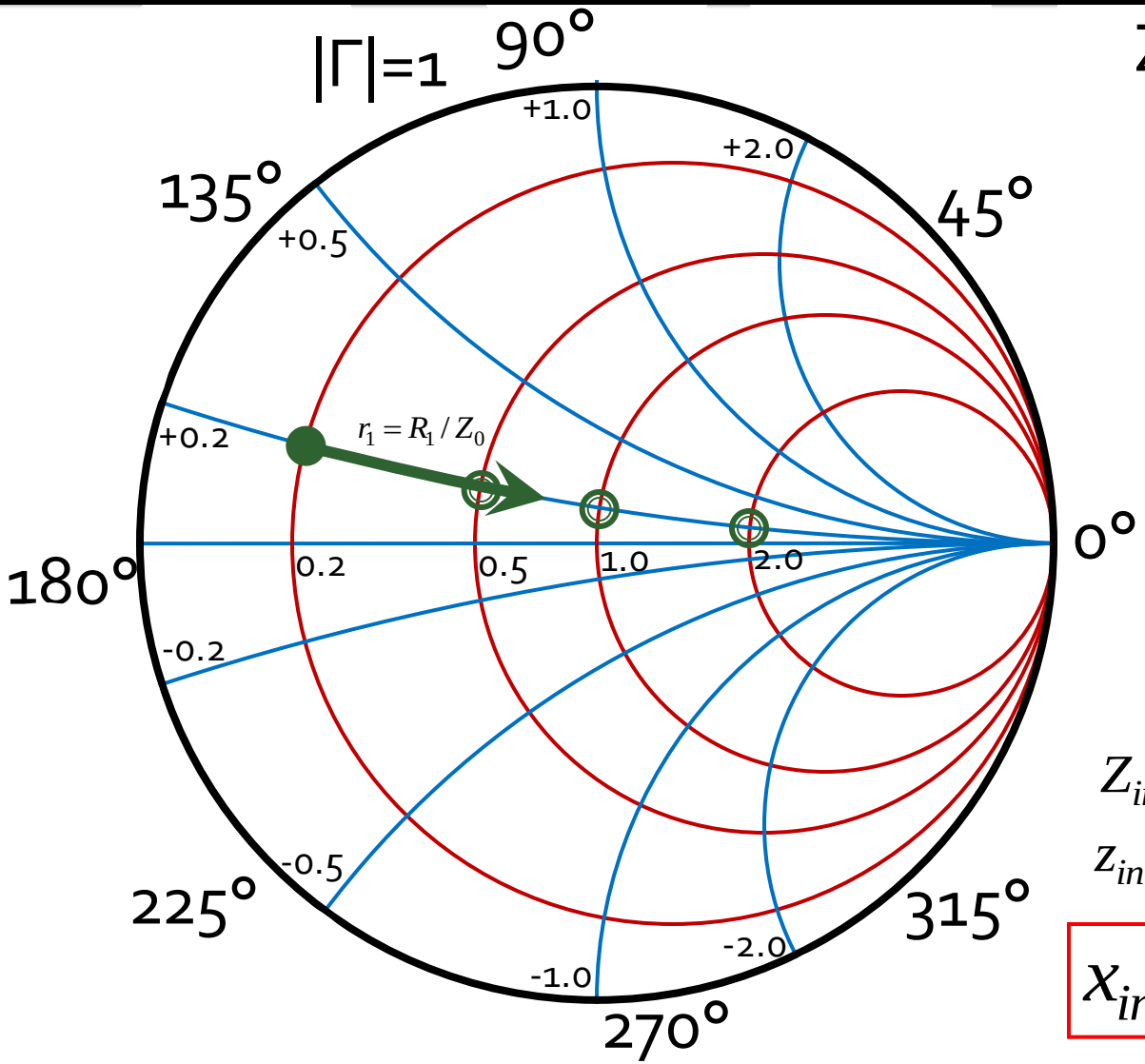

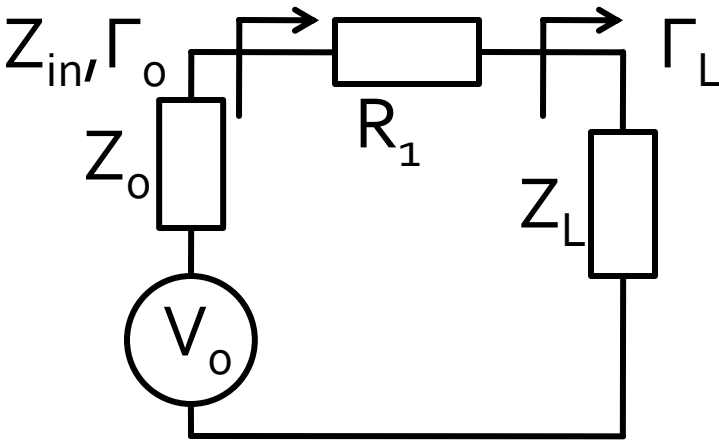

$$Z_0 = 50\Omega$$

$$Z_L = R_L + j \cdot X_L = 10\Omega + j \cdot 10$$

$$z_L = r_L + j \cdot x_L = 0.2 + j \cdot 0.2$$

$$\Gamma_L = 0.678\angle 156.5°$$

$$Z_{in} = Z_L + R_1 = (R_L + R_1) + j \cdot X_L$$

$$z_{in} = z_L + r_1 = (r_L + r_1) + j \cdot x_L$$

$$\boxed{x_{in} = x_L} \qquad r_{in} = r_L + R_1 / Z_0$$

ADS, Diagrama Smith, rezistenta in serie

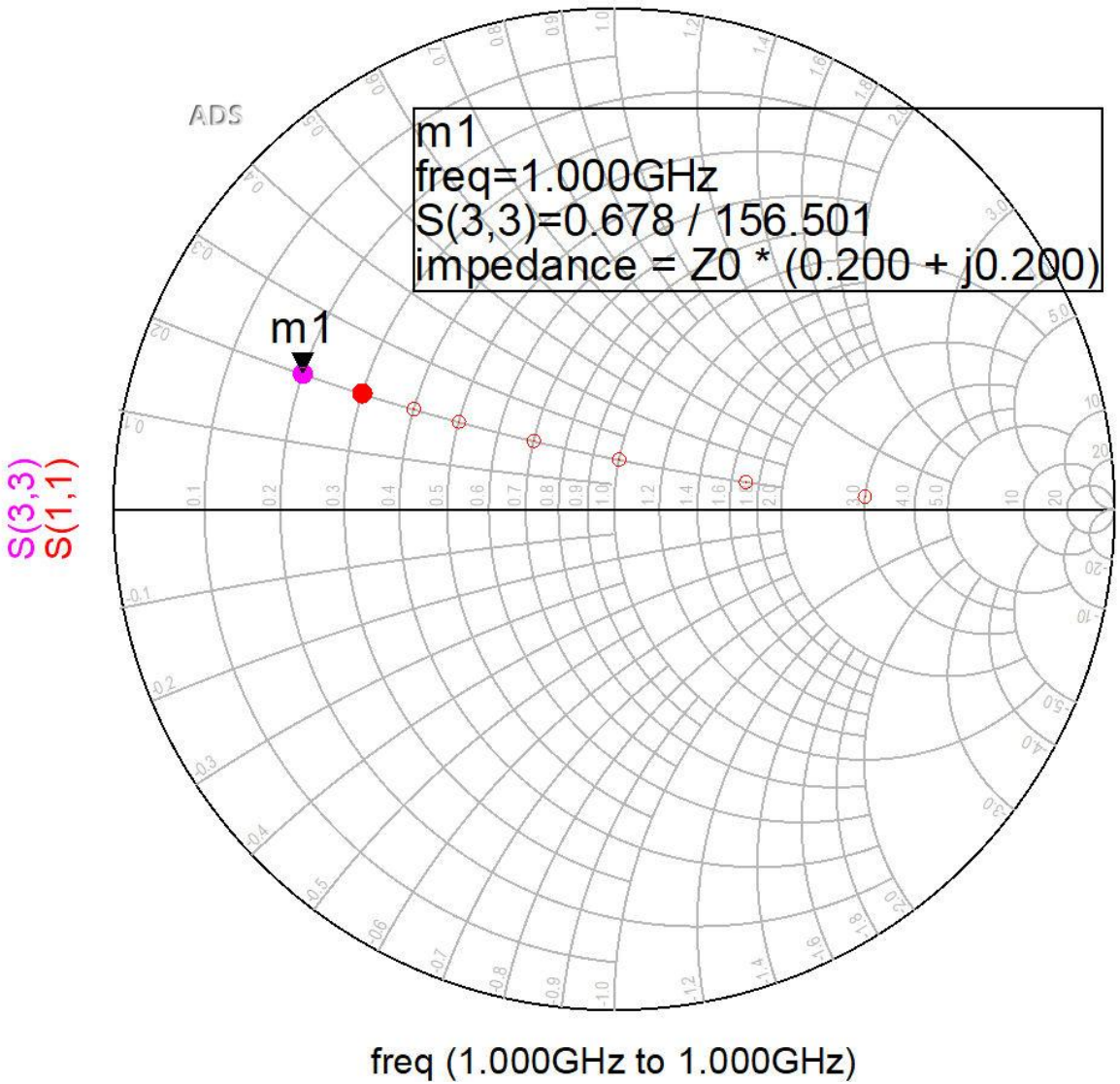

Diagrama Smith, coeficient de reflexie, linie de transmisie in serie

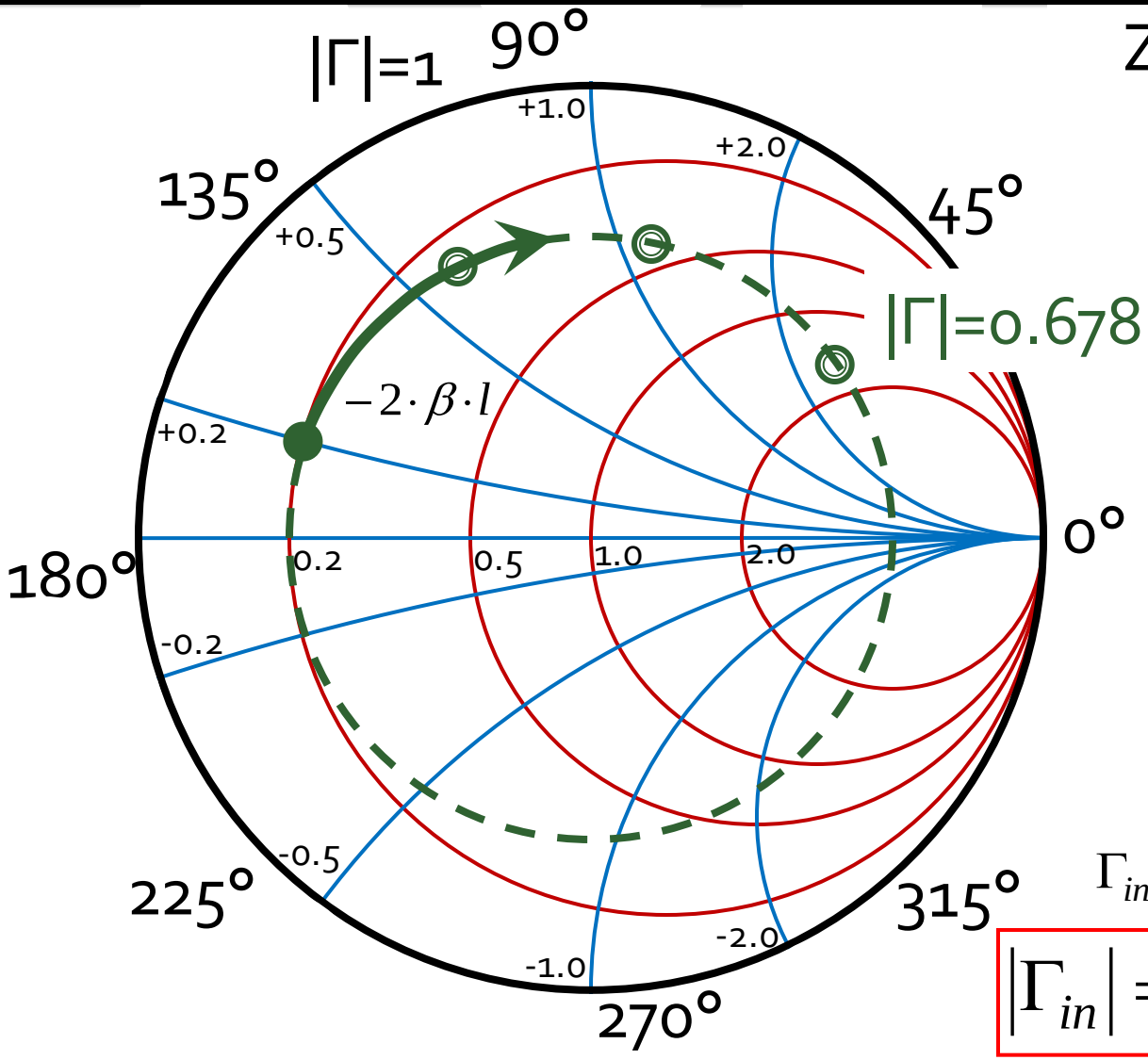

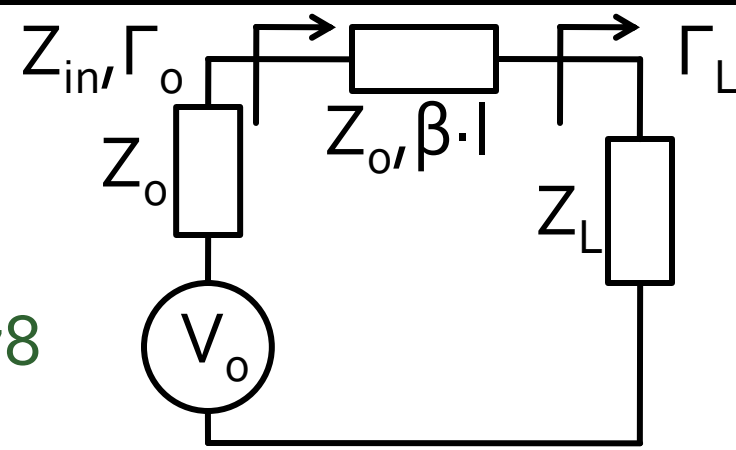

$$Z_0 = 50\Omega$$

$$Z_L = R_L + j\cdot X_L = 10\Omega + j\cdot 10$$

$$z_L = r_L + j\cdot x_L = 0.2 + j\cdot 0.2$$

$$\Gamma_L = 0.678\angle 156.5°$$

$$Z_{in} = Z_0\cdot\frac{1+\Gamma_L\cdot e^{-2j\cdot\beta\cdot l}}{1-\Gamma_L\cdot e^{-2j\cdot\beta\cdot l}}$$

$$\Gamma_{in} = \Gamma_L\cdot e^{-2j\cdot\beta\cdot l}$$

$$\boxed{|\Gamma_{in}| = |\Gamma_L|}$$

$$\arg(\Gamma_{in}) = \arg(\Gamma_L) - 2\cdot\beta\cdot$$

ADS, Diagrama Smith, linie de transmisie in serie

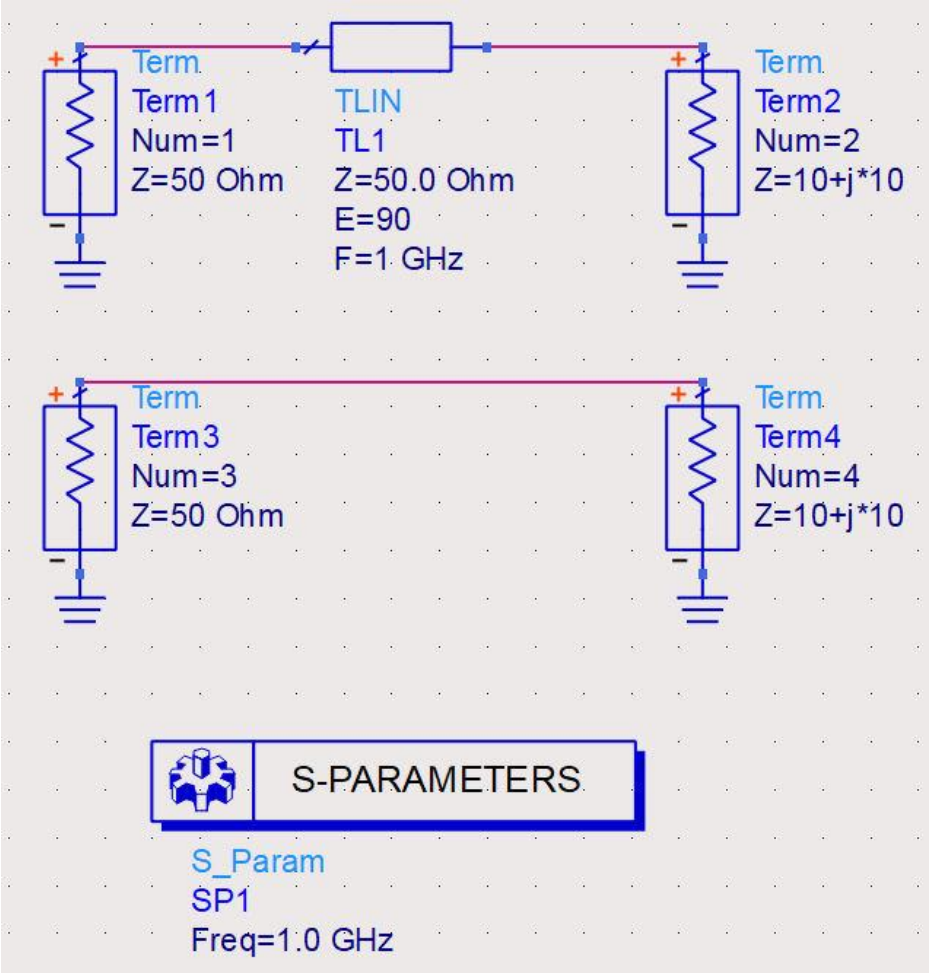

ADS, Diagrama Smith, linie de transmisie in serie

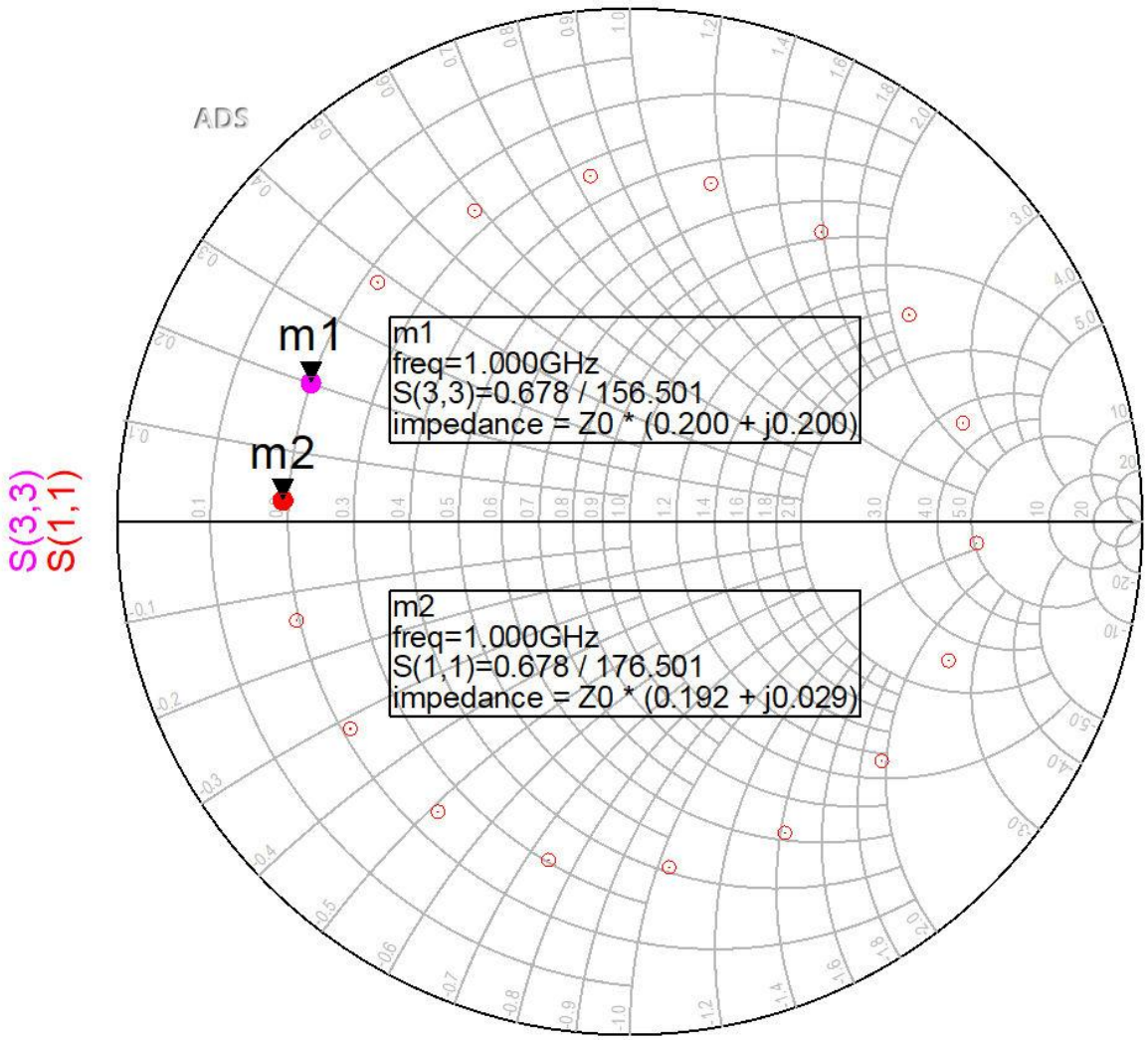

ADS, Diagrama Smith, linie de transmisie in serie, 90°

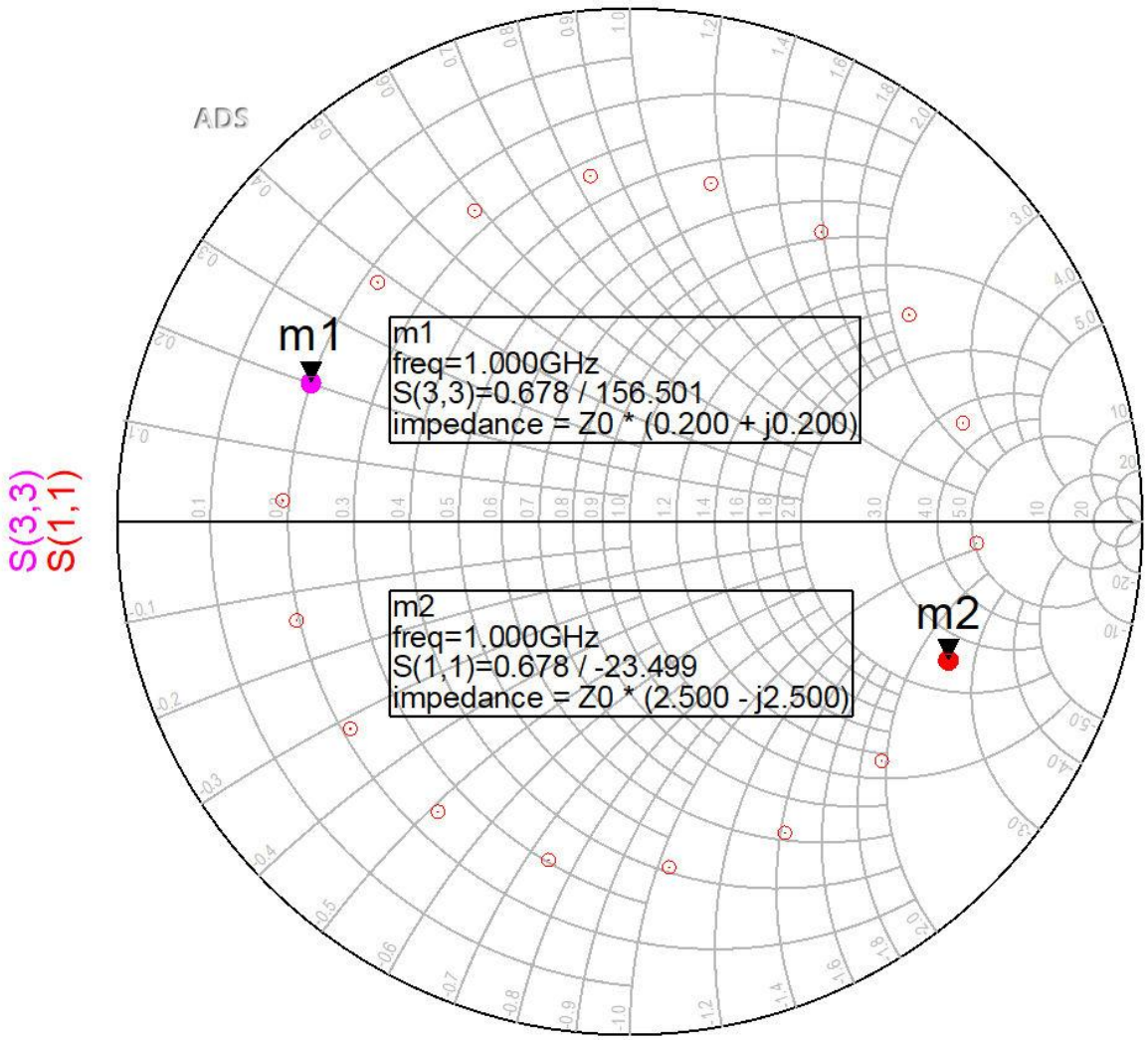

ADS, Diagrama Smith, linie de transmisie in serie, 180°

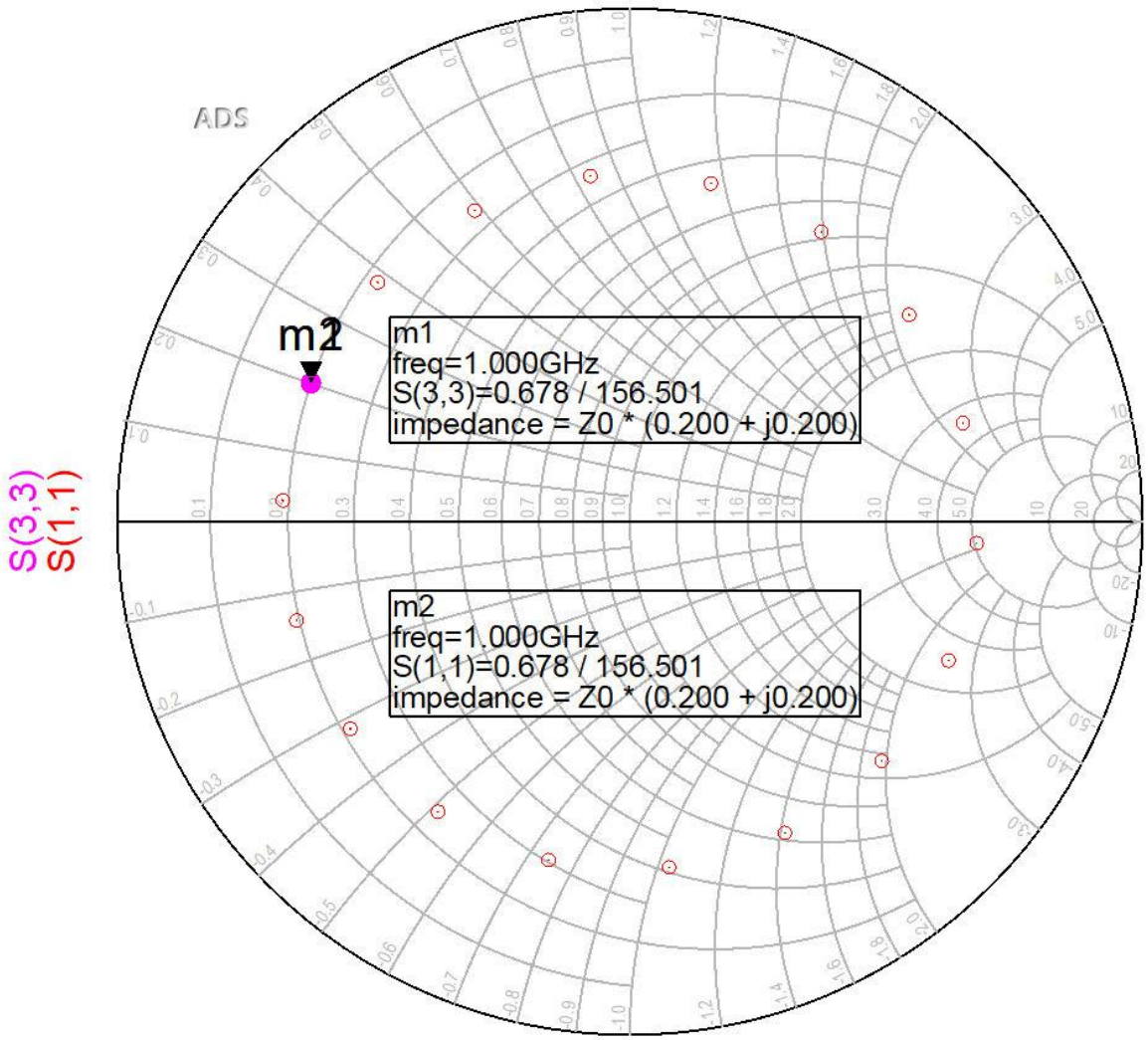

ADS, Diagrama Smith, linie de transmisie in serie, Z=25Ω≠Zo

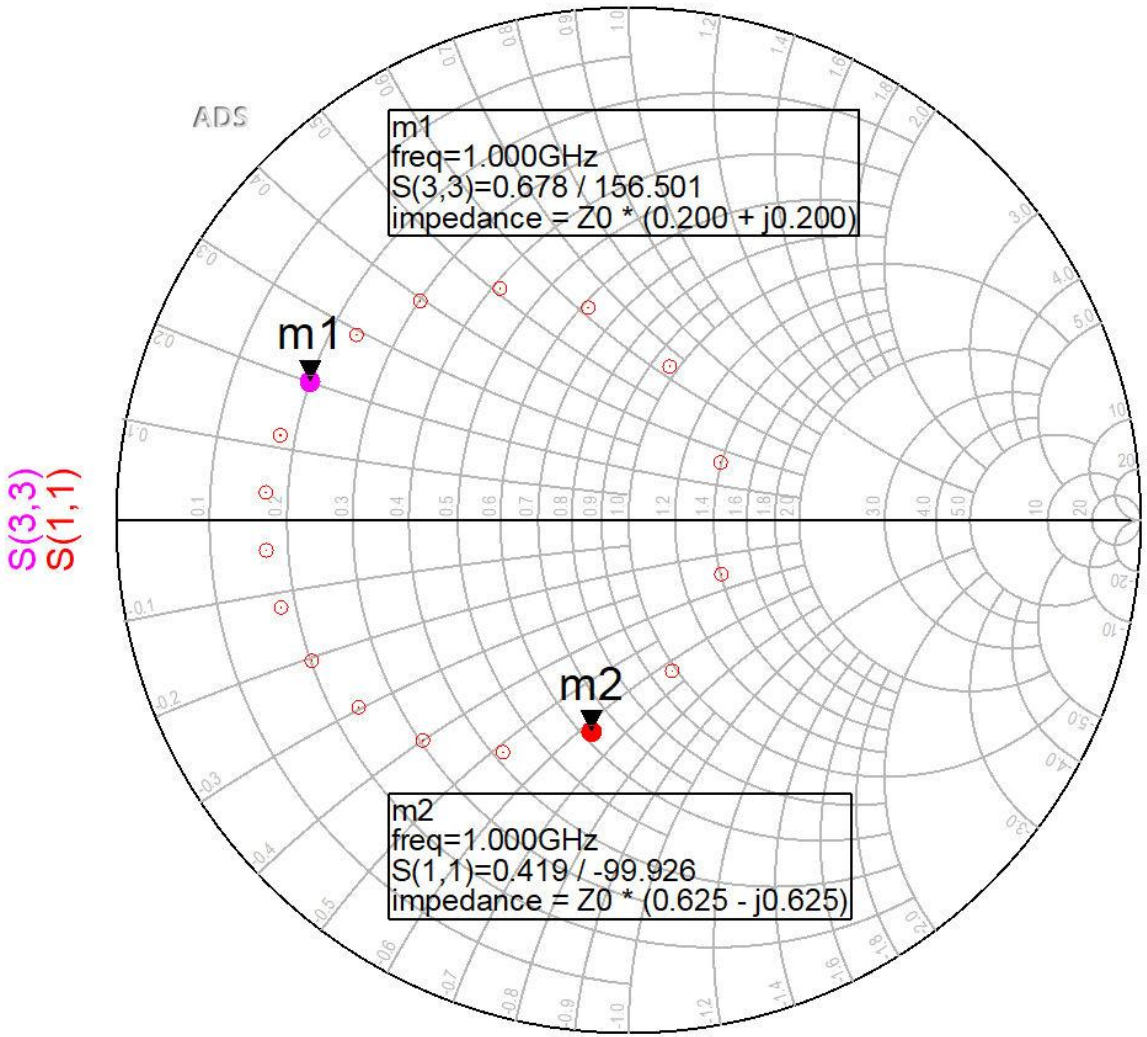

Diagrama Smith, admitante

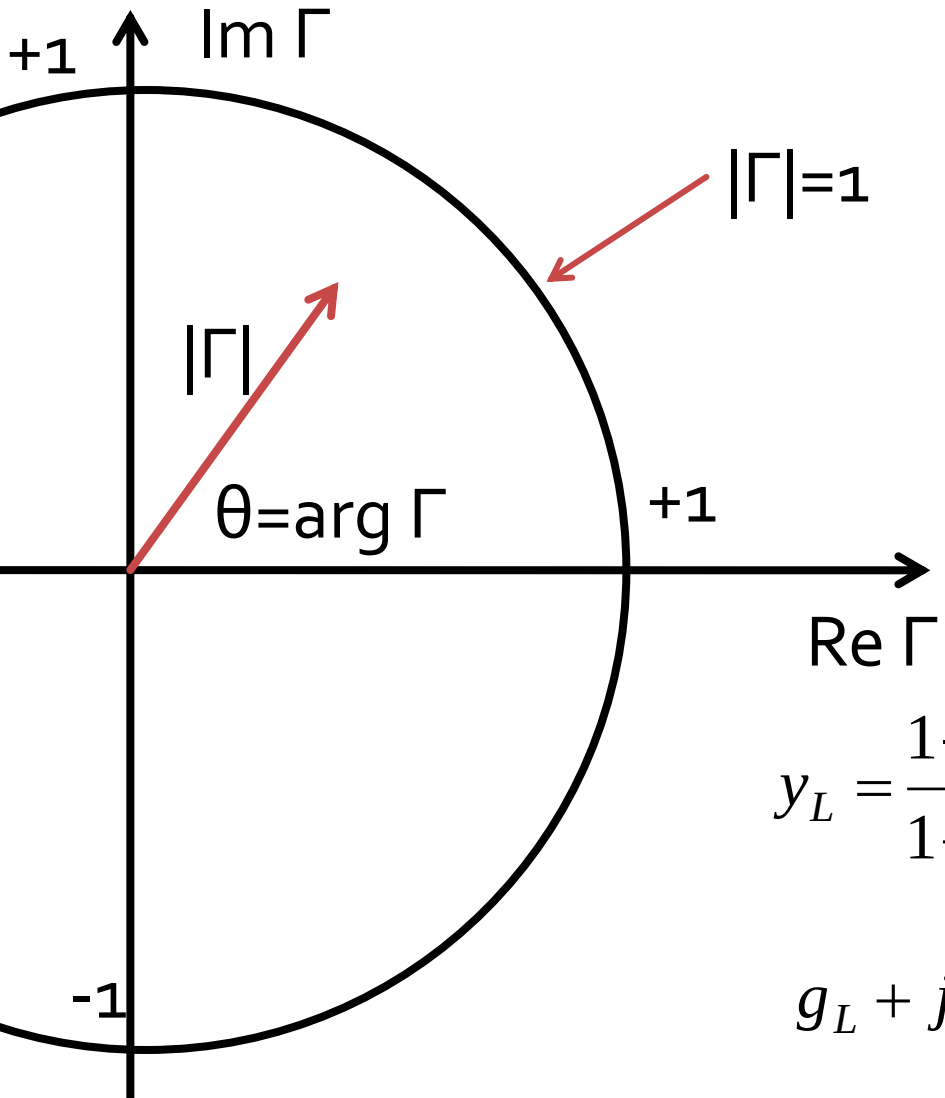

$$\Gamma = \frac{Z_L - Z_0}{Z_L + Z_0} = \frac{z_L - 1}{z_L + 1} = |\Gamma| \cdot e^{j\theta}$$

$$\Gamma = \Gamma_r + j \cdot \Gamma_i$$

$$z_L = \frac{1 + |\Gamma| \cdot e^{j\theta}}{1 - |\Gamma| \cdot e^{j\theta}} = r_L + j \cdot x_L$$

$$y_L = \frac{1 - |\Gamma| \cdot e^{j\theta}}{1 + |\Gamma| \cdot e^{j\theta}} = \frac{1}{r_L + j \cdot x_L} = g_L + j \cdot b_L$$

$$g_L + j \cdot b_L = \frac{(1 - \Gamma_r) - j \cdot \Gamma_i}{(1 + \Gamma_r) + j \cdot \Gamma_i}$$

Diagrama Smith, admitante

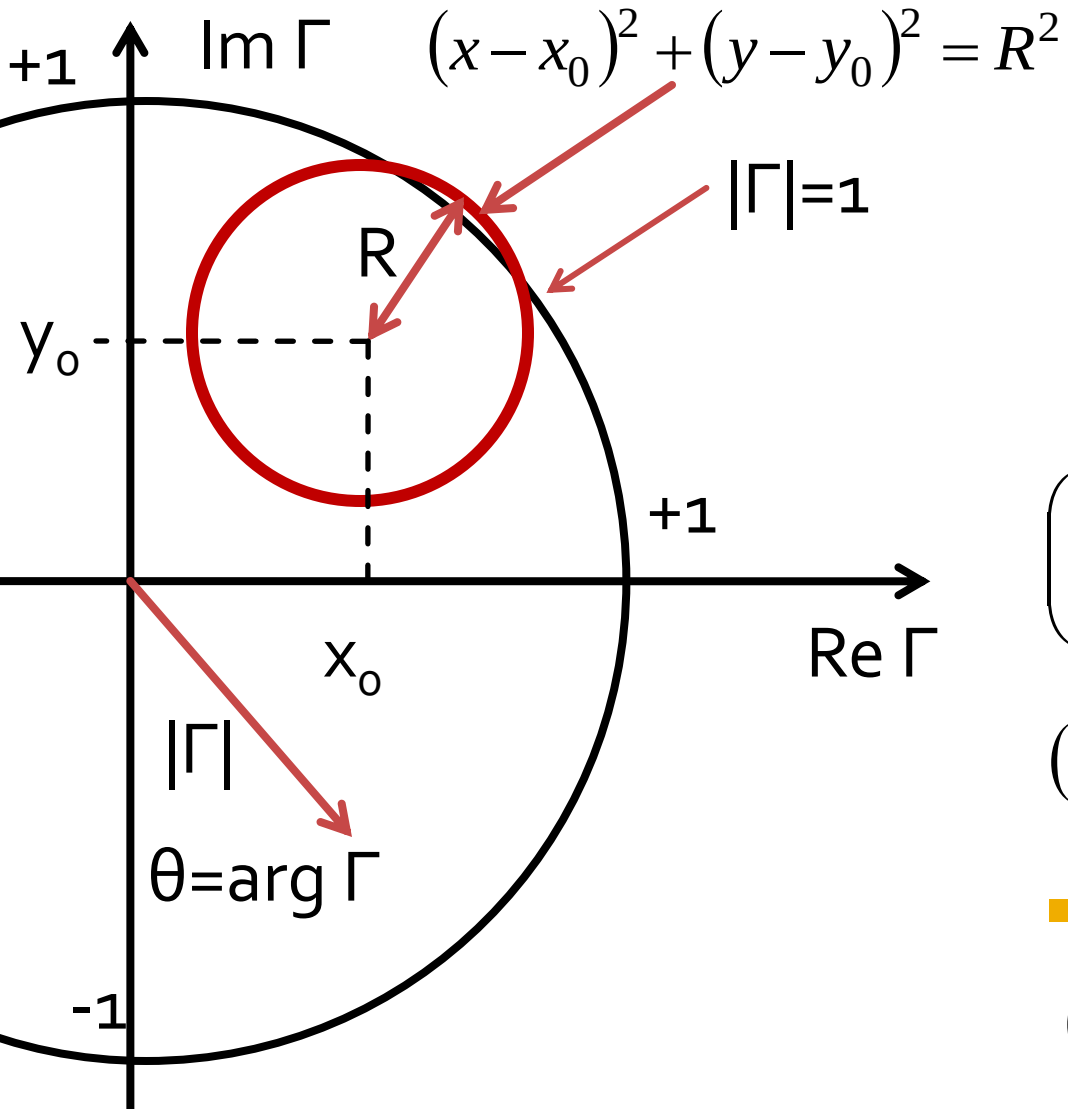

$$g_L=\frac{1-\Gamma_r^2-\Gamma_i^2}{(1+\Gamma_r)^2+\Gamma_i^2}$$

$$b_L=\frac{-2\cdot\Gamma_i}{(1+\Gamma_r)^2+\Gamma_i^2}$$

- Rearajate

$$\left(\Gamma_r+\frac{g_L}{1+g_L}\right)^2+\Gamma_i^2=\left(\frac{1}{1+g_L}\right)^2$$

$$(\Gamma_r+1)^2+\left(\Gamma_i+\frac{1}{b_L}\right)^2=\left(\frac{1}{b_L}\right)^2$$

- Cercuri in planul complex

$$(x-x_0)^2+(y-y_0)^2=R^2$$

Diagrama Smith, conductanta

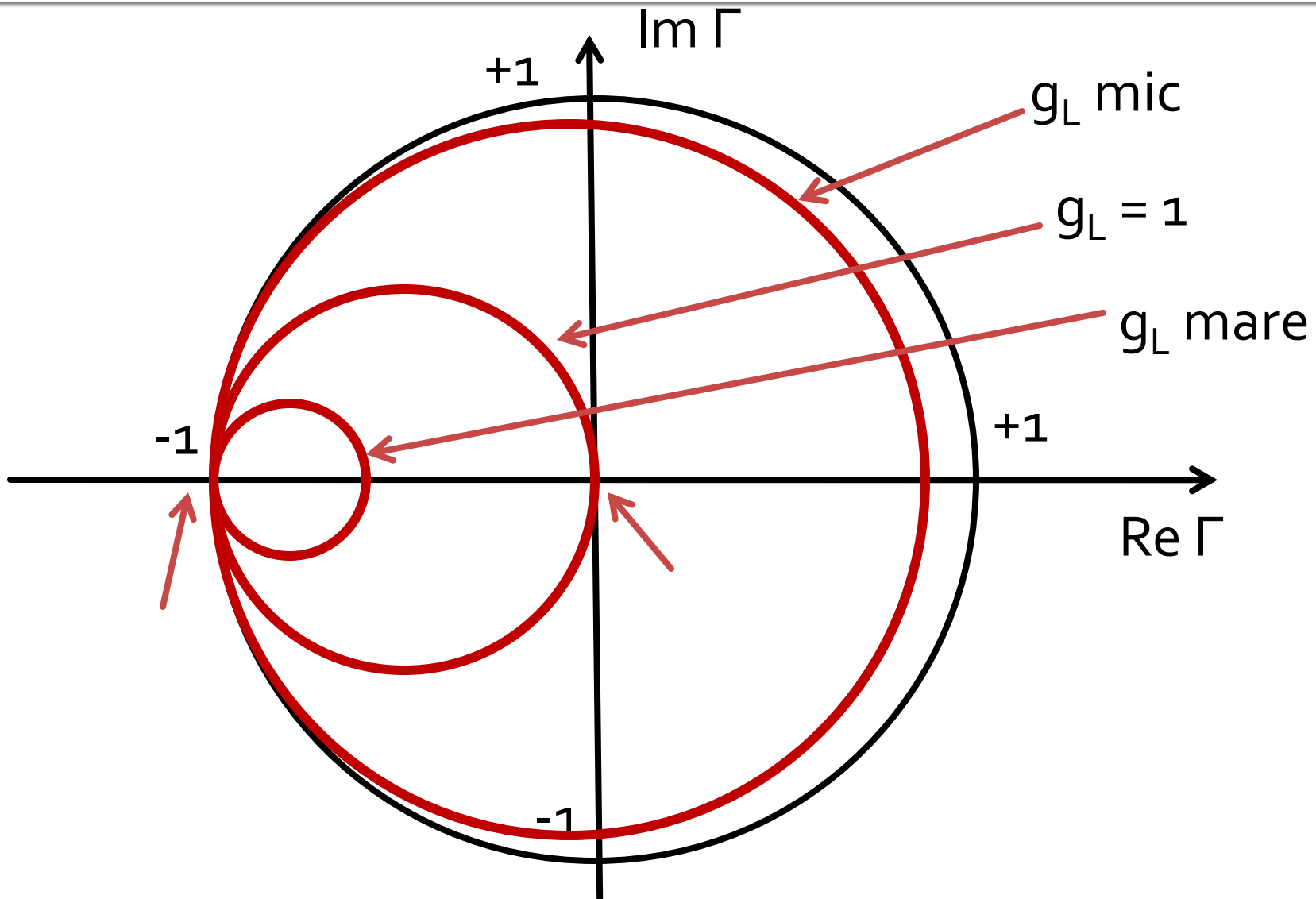

Diagrama Smith, susceptanta

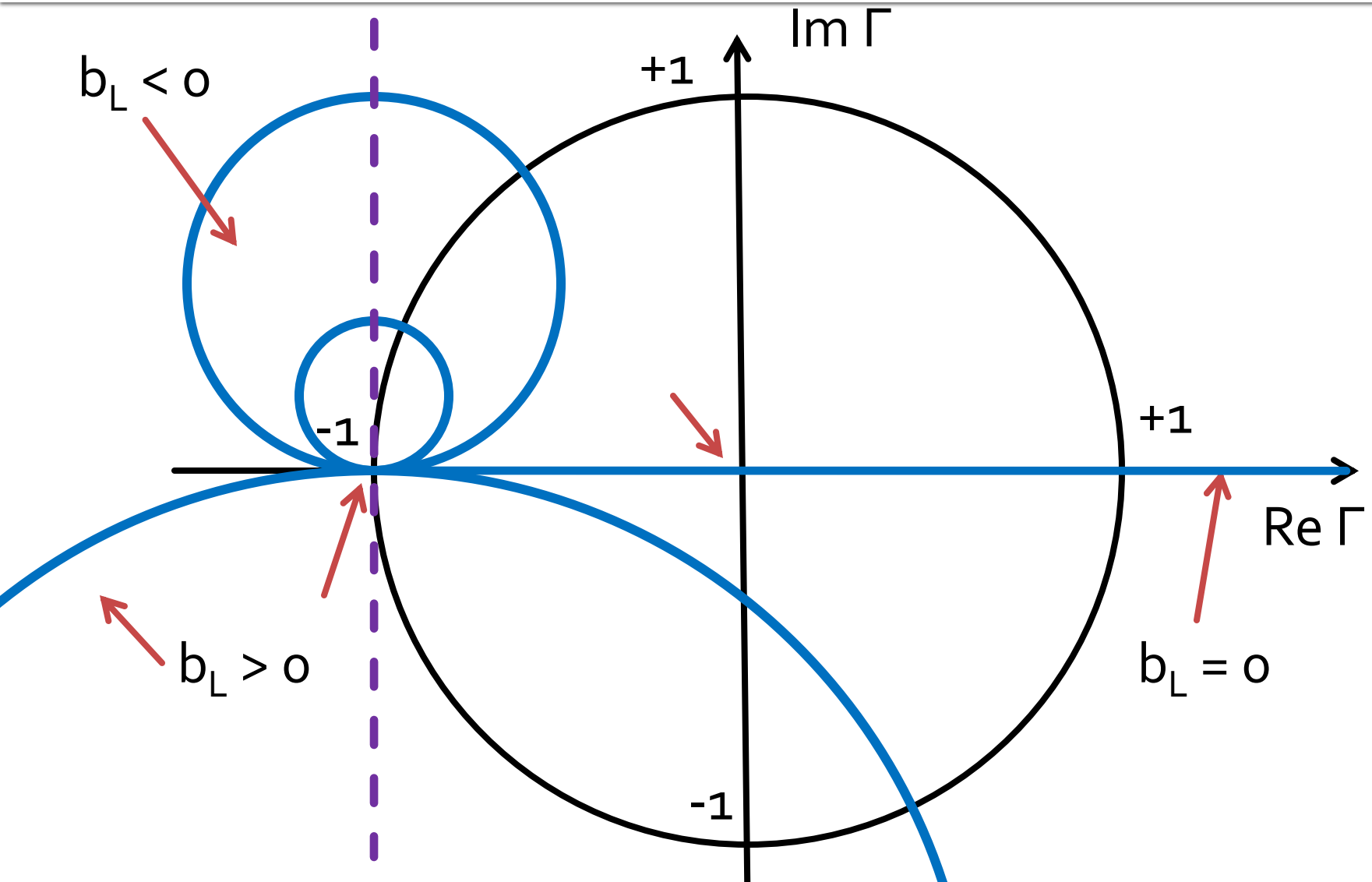

Diagrama Smith, coeficient de reflexie ←→ admitanta

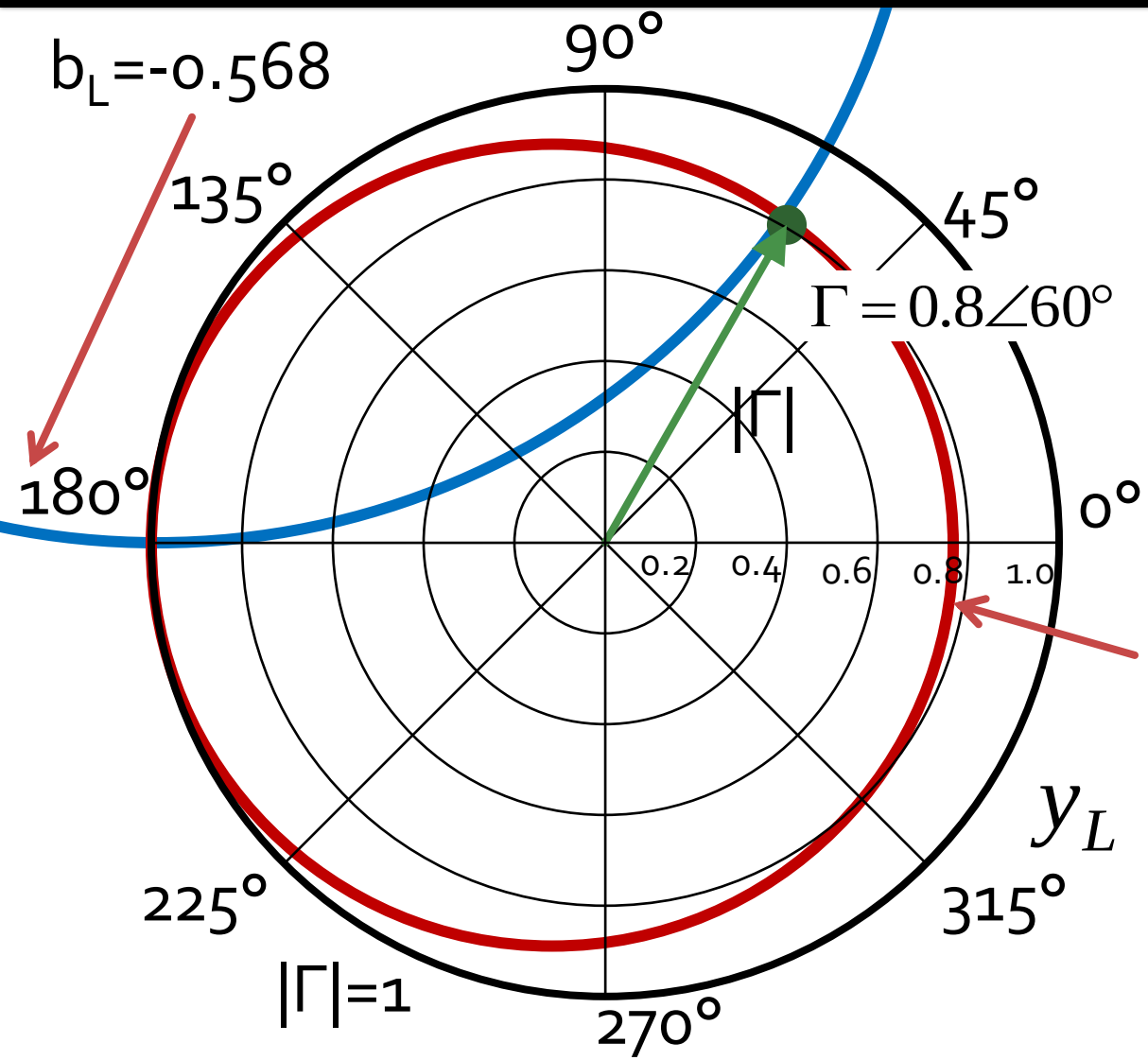

$$\Gamma = 0.8\angle 60°$$

$$Z_L = 21.429\Omega + j\cdot 82.479\Omega$$

$$z_L = 0.429 + j\cdot 1.65$$

$$y_L = \frac{1}{z_L} = 0.148 - j\cdot 0.568$$

$$y_L = 0.148 + j\cdot 0.568$$

(oricare Z_o)

Diagrama Smith, coeficient de reflexie, admitanta

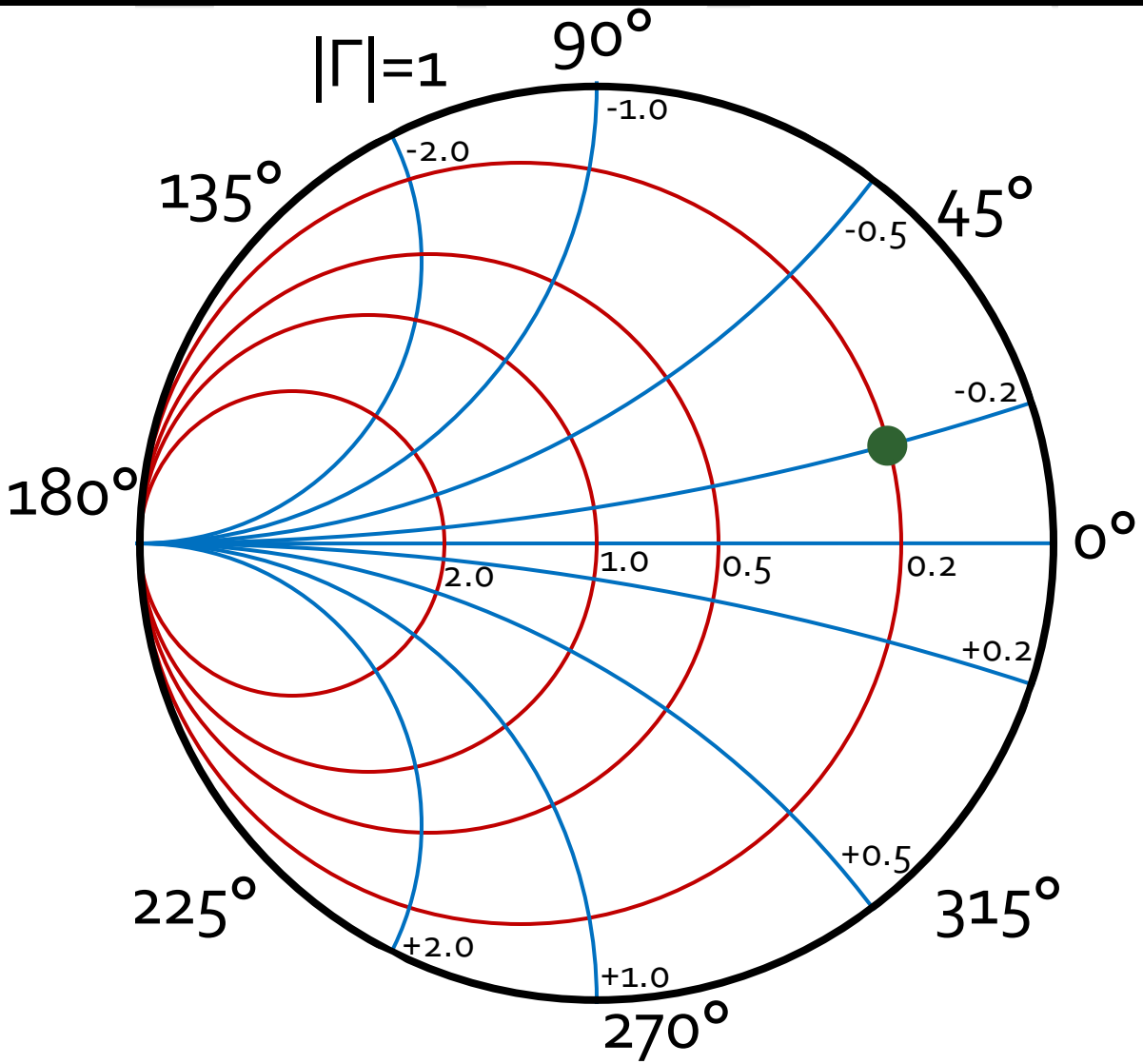

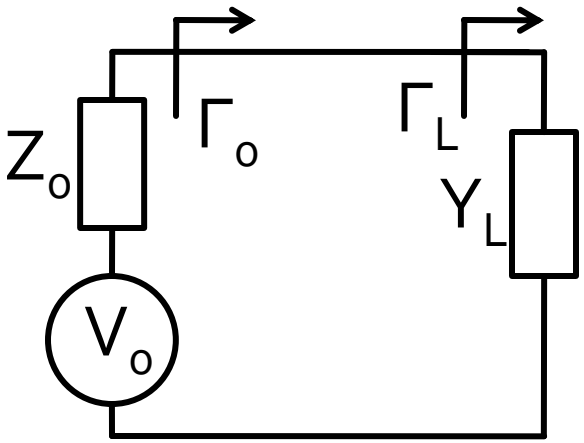

$$Z_0 = 50\Omega, Y_0 = 0.02S$$

$$Z_L = 125\Omega + j \cdot 125\Omega$$

$$z_L = 2.5 + j \cdot 2.5$$

$$\Gamma_L = \Gamma_0 = 0.678\angle 23.5°$$

$$Y_L = \frac{1}{Z_L} = 0.004S - j \cdot 0.004S$$

$$y_L = \frac{1}{z_L} = \frac{Y_L}{Y_0} = 0.2 - j \cdot 0.2$$

Diagrama Smith, coeficient de reflexie, susceptanta in paralel

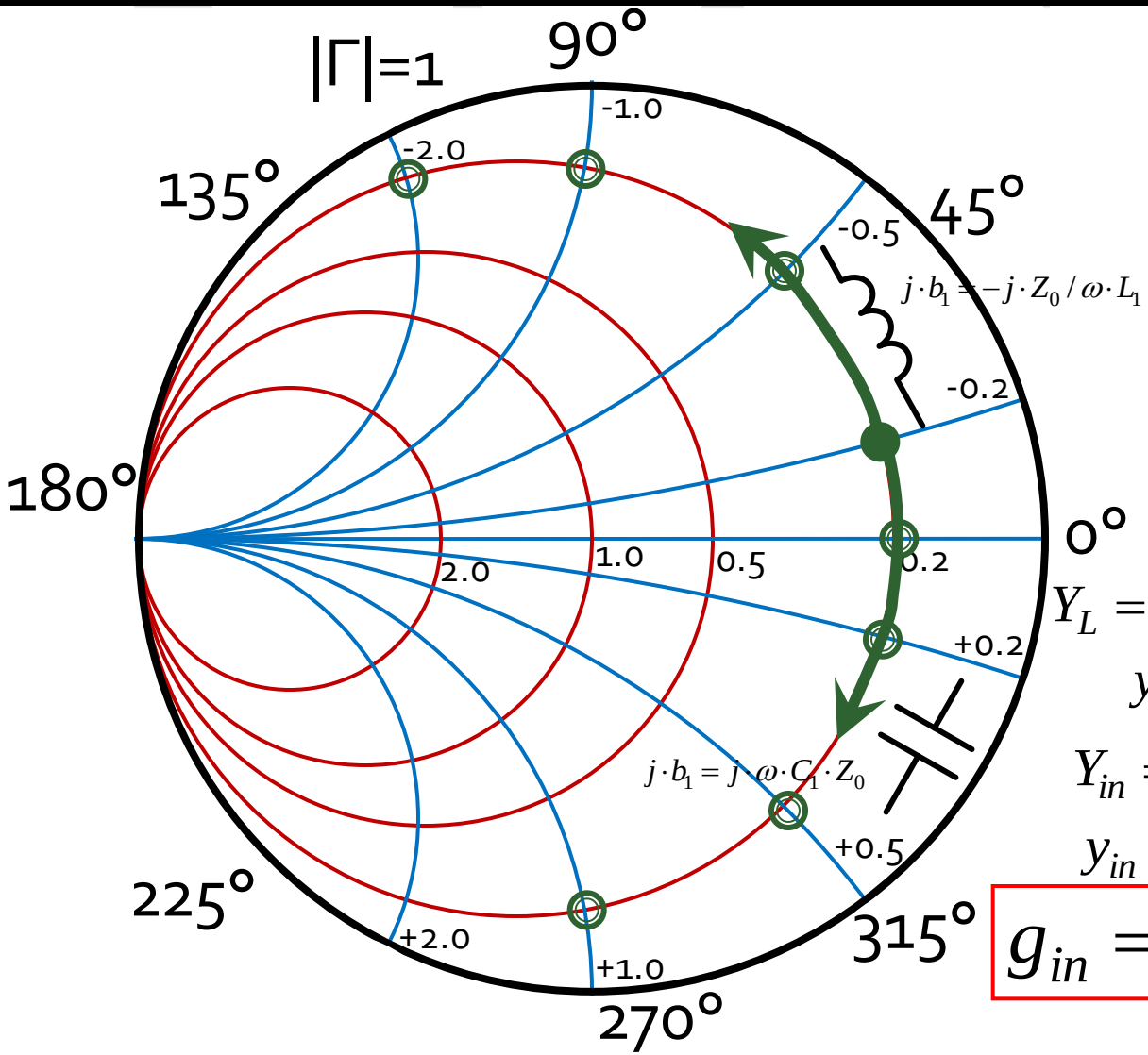

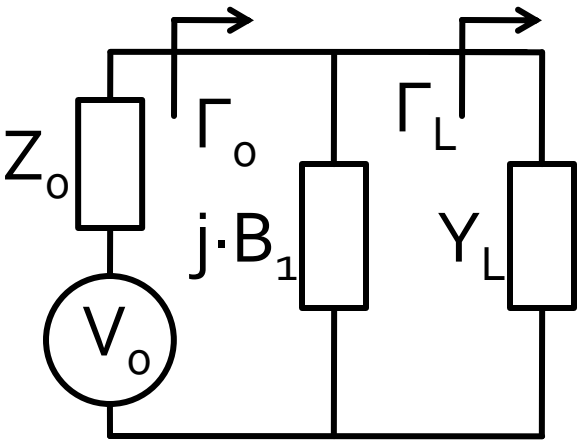

$$Z_0 = 50\Omega, Y_0 = 0.02S$$

$$\Gamma_L = 0.678\angle 23.5°$$

$$Y_L = G_L + j \cdot B_L = 0.004S + j \cdot 0.004$$

$$y_L = g_L + j \cdot b_L = 0.2 - j \cdot 0.2$$

$$Y_{in} = Y_L + j \cdot B_1 = G_L + j \cdot (B_L + B_1)$$

$$y_{in} = g_L + j \cdot (b_L + b_1)$$

$$\boxed{g_{in} = g_L}$$

$$j \cdot b_1 = j \cdot \omega \cdot C_1 \cdot Z_0 > 0$$

$$j \cdot b_1 = -j \cdot Z_0 / \omega \cdot L_1 < 0$$

ADS, Diagrama Smith, susceptanta in paralel

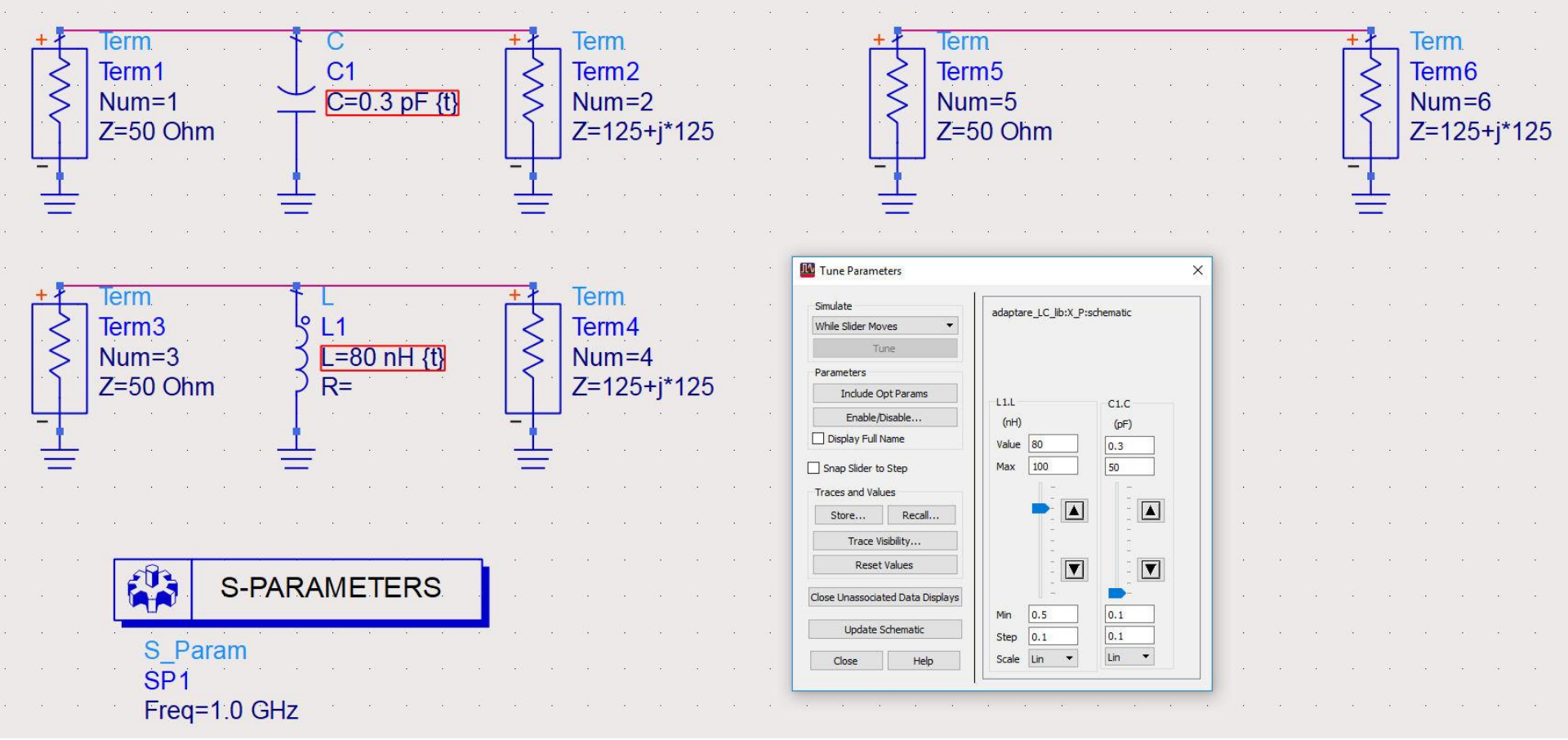

ADS, Diagrama Smith, susceptanta in paralel

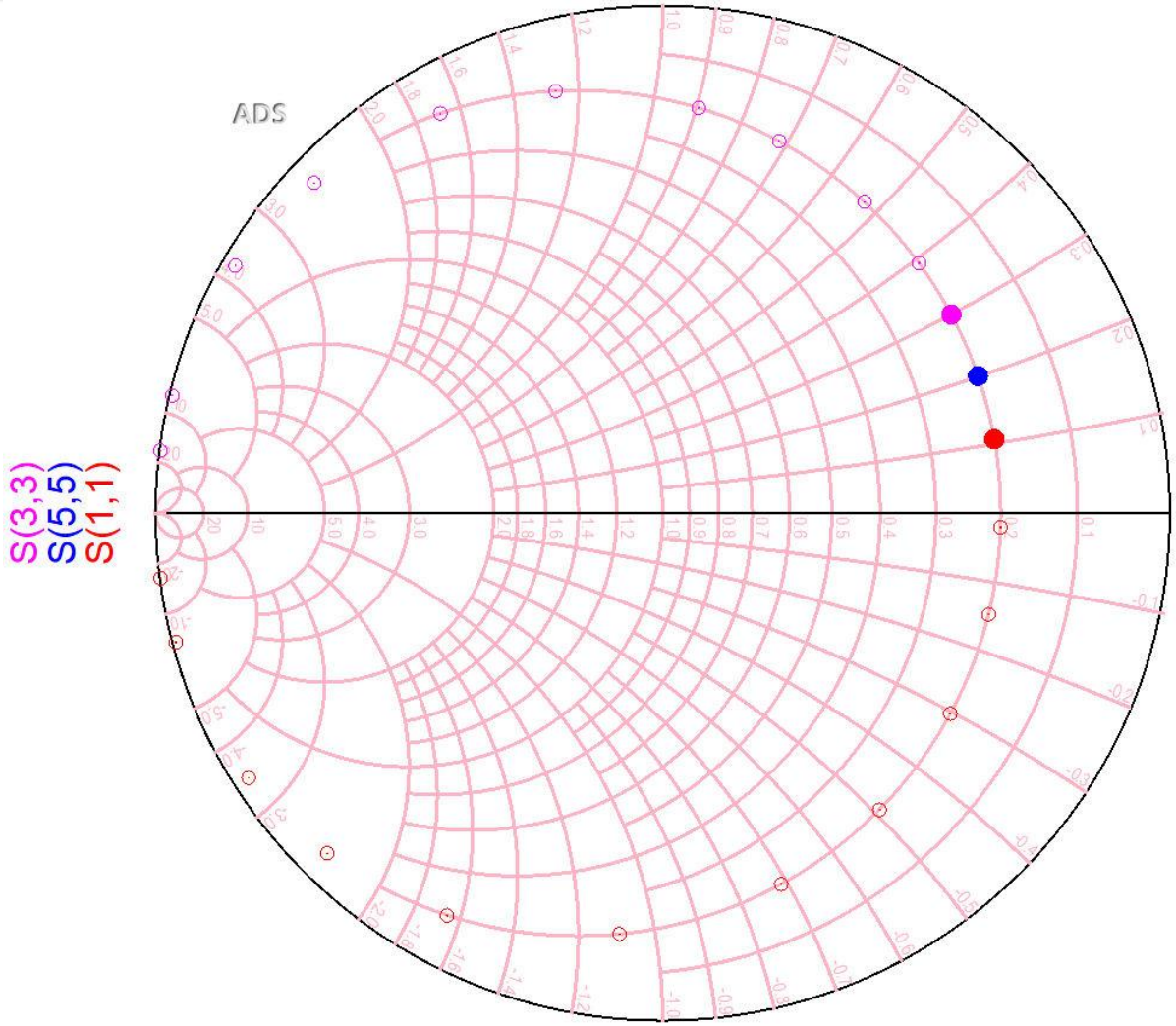

freq (1.000GHz to 1.000GHz)

Diagrama Smith, coeficient de reflexie, conductanta in paralel

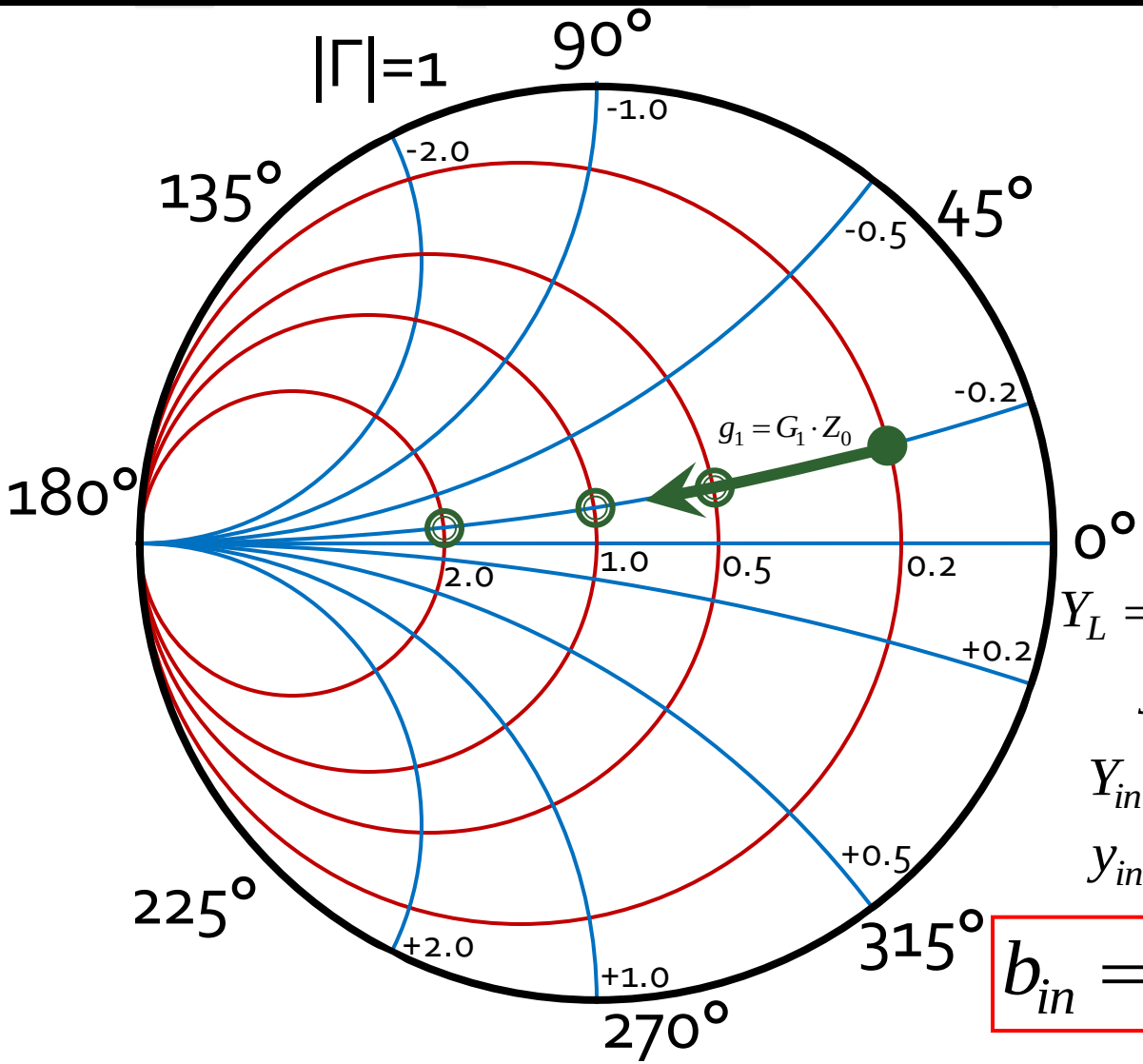

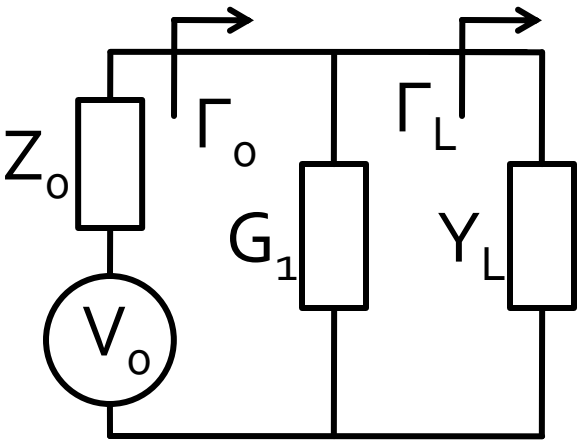

$$Z_0 = 50\Omega, Y_0 = 0.02S$$

$$\Gamma_L = 0.678\angle 23.5°$$

$$Y_L = G_L + j \cdot B_L = 0.004S + j \cdot 0.004$$

$$y_L = g_L + j \cdot b_L = 0.2 - j \cdot 0.2$$

$$Y_{in} = Y_L + G_1 = (G_L + G_1) + j \cdot B_L$$

$$y_{in} = (g_L + g_1) + j \cdot b_L$$

$$\boxed{b_{in} = b_L}$$

$$g_{in} = g_L + G_1 \cdot Z_0$$

ADS, Diagrama Smith, conductanta in paralel

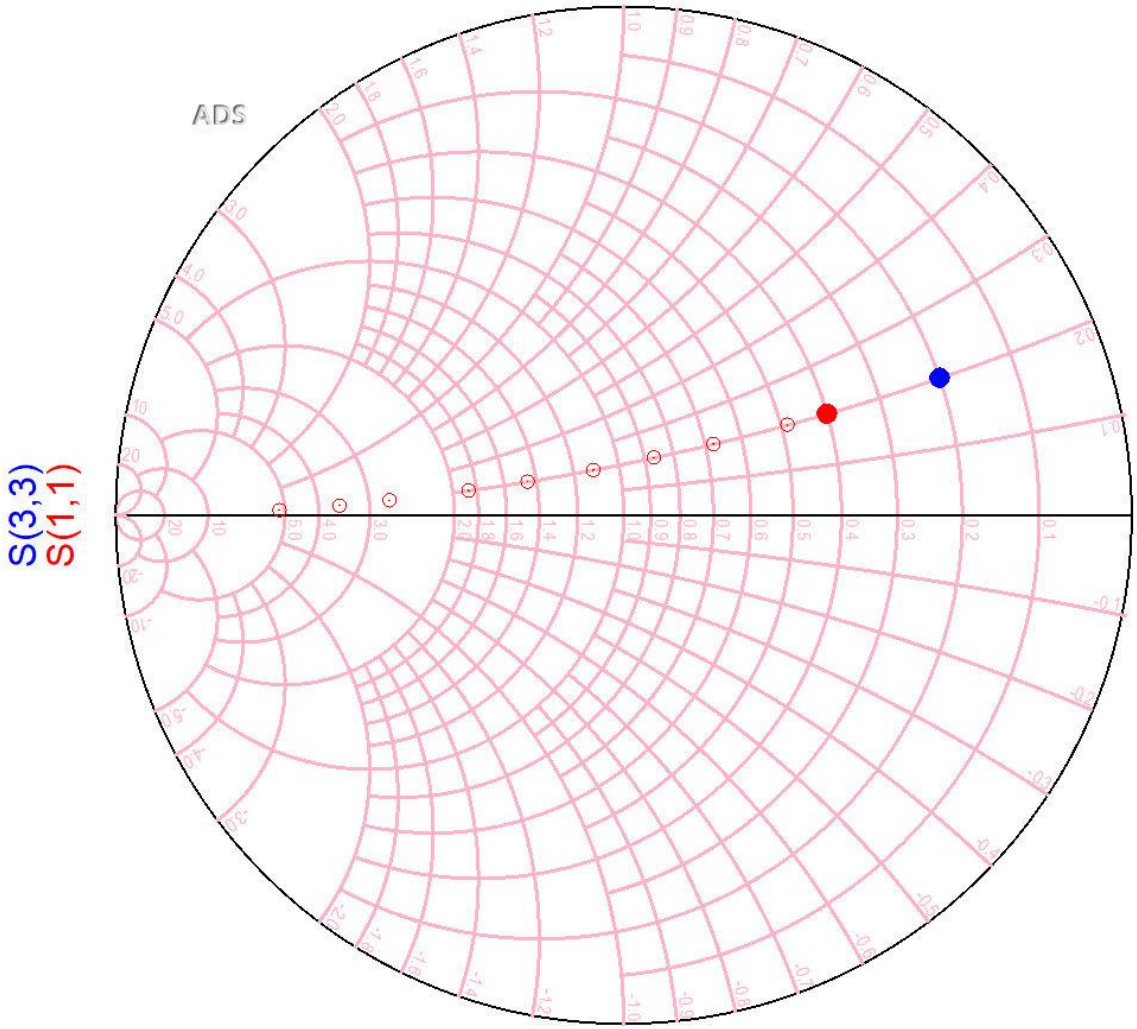

freq (1.000GHz to 1.000GHz)

VSWR

- Anumite aplicatii pot impune un raport intre tensiunile maxime/minime pe linii
  - VSWR = const → Γ = const

$$VSWR = \frac{V_{\max}}{V_{\min}} = \frac{1+|\Gamma|}{1-|\Gamma|}$$

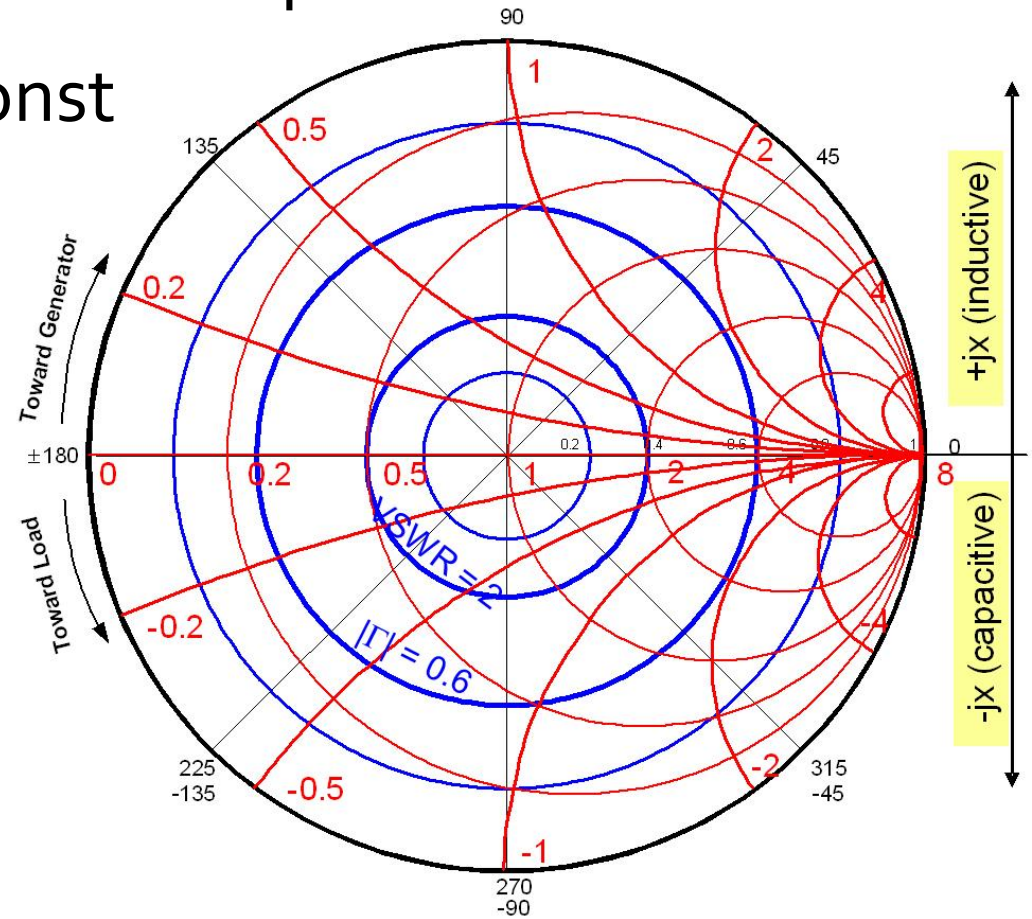

Cercuri de factor de calitate constant

- Diagrama Smith

$$Q = \frac{X}{R} = \frac{G}{B} = const$$

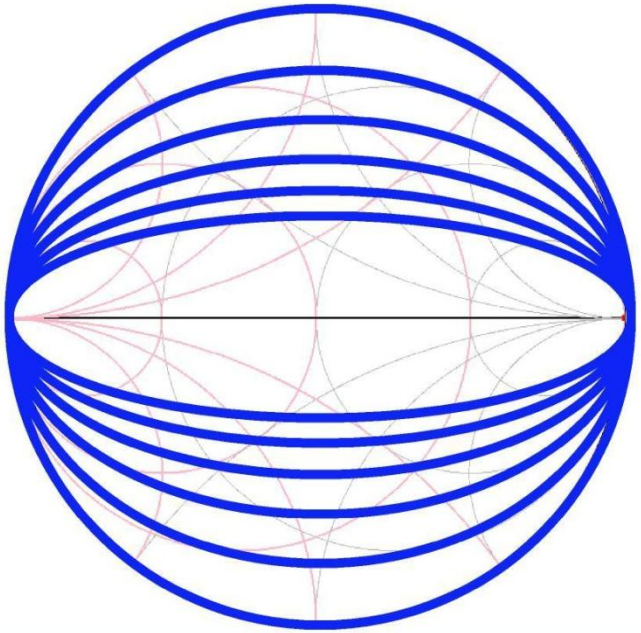

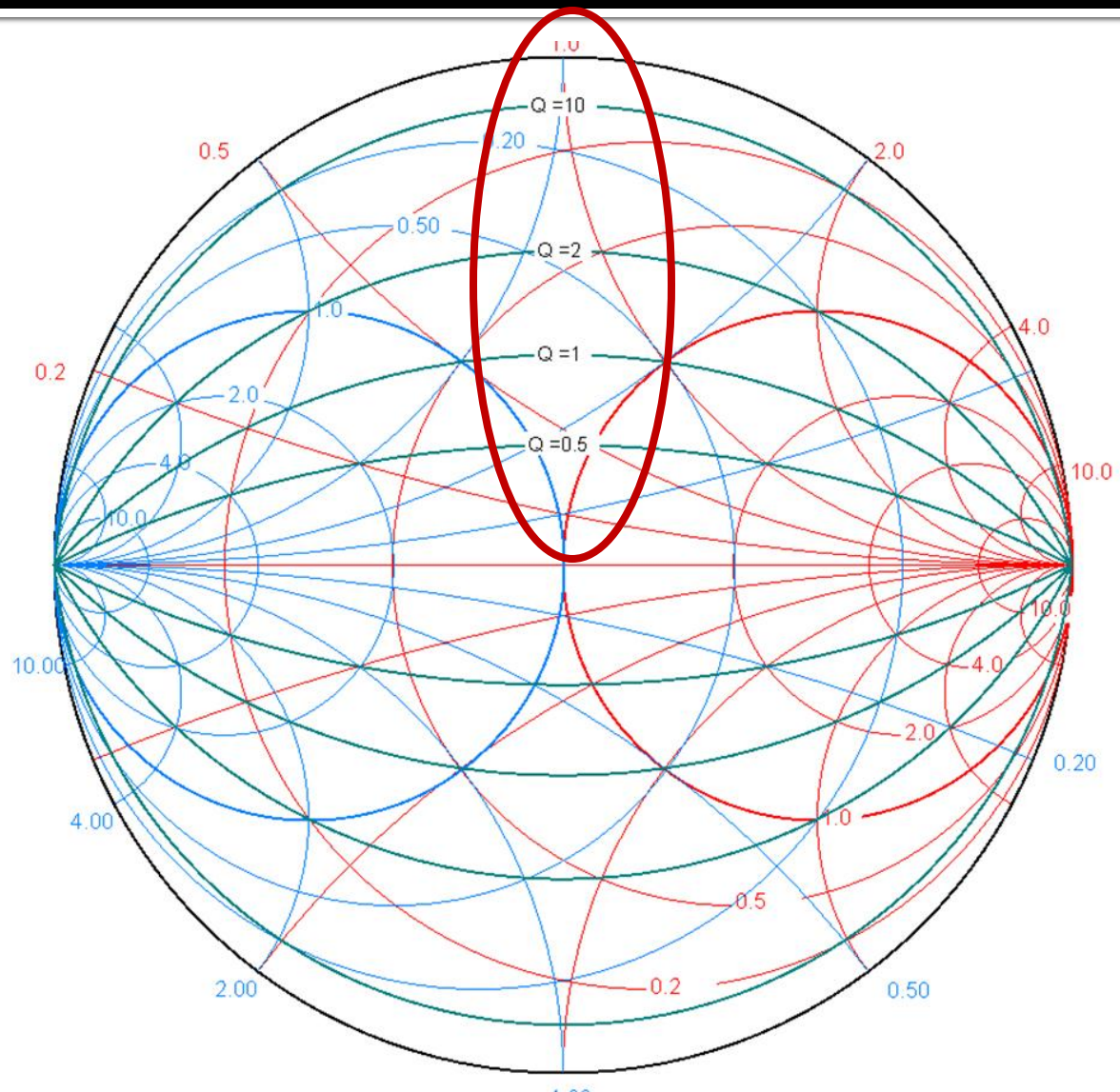

Utilizare standard

- linie de transmisie
  - 100Ω
  - 0.3λ lungime
  - $Z_L = 40\Omega + j\cdot 70\Omega$
- raportare la $Z_0 = 100\Omega$

$$z_L = \frac{Z_L}{Z_0} = 0.4 + j\cdot 0.7$$

- deplasare 0.3λ pe o linie cu $Z_0 = 100\Omega$ (cerc)
  - Plecand din z_L (0.105λ)
  - Pana la z_{in} (0.405λ)

$$z_{in} \approx 0.36 - j\cdot 0.6 = \frac{Z_{in}}{Z_0}$$

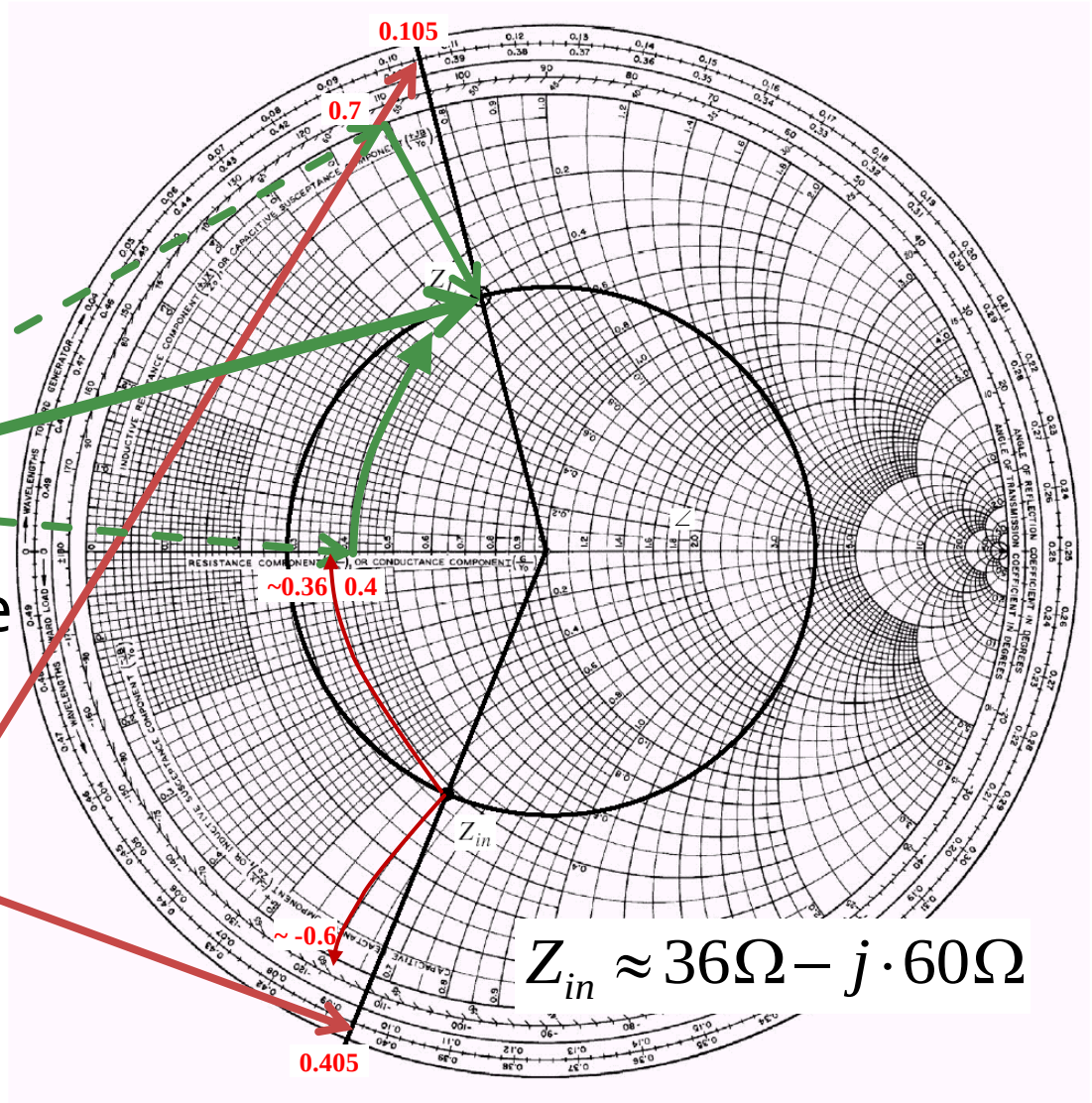

$$Z_{in} \approx 36\Omega - j\cdot 60\Omega$$

Utilizare coeficienti de reflexie

- linie de transmisie
  - 100Ω impedanta caracteristica
  - 0.3λ lungime
  - Z_L = 40Ω+j·70Ω
- Zin=?

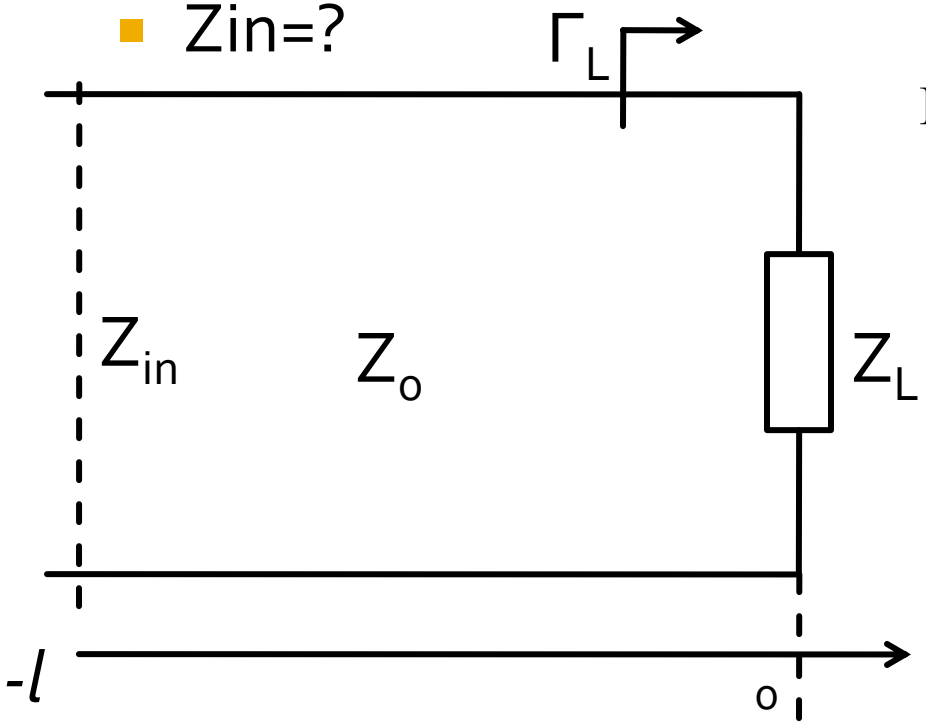

$$z_L = \frac{Z_L}{Z_0} = 0.4 + j \cdot 0.7$$

$$\Gamma_L = \frac{z_L - 1}{z_L + 1} = -0.143 + j \cdot 0.571$$

$$\Gamma_{in} = \Gamma_L \cdot e^{-2j \cdot \beta \cdot l} = \Gamma_L \cdot e^{-2j \cdot \frac{2 \cdot \pi}{\lambda} \cdot 0.3\lambda} = \Gamma_L \cdot e^{-1.2j \cdot \pi}$$

$$\theta = -1.2 \cdot \pi = -216°$$

$$\Gamma_{in} = \Gamma_L \cdot (\cos 216° - j \cdot \sin 216°) =$$

$$= -0.22 - j \cdot 0.546$$

$$z_{in} = \frac{1 + \Gamma_{in}}{1 - \Gamma_{in}} = 0.365 - j \cdot 0.611$$

$$Z_{in} = z_{in} \cdot Z_0 = 36.534\Omega - j \cdot 61.119\Omega$$

Utilizare coeficienti de reflexie

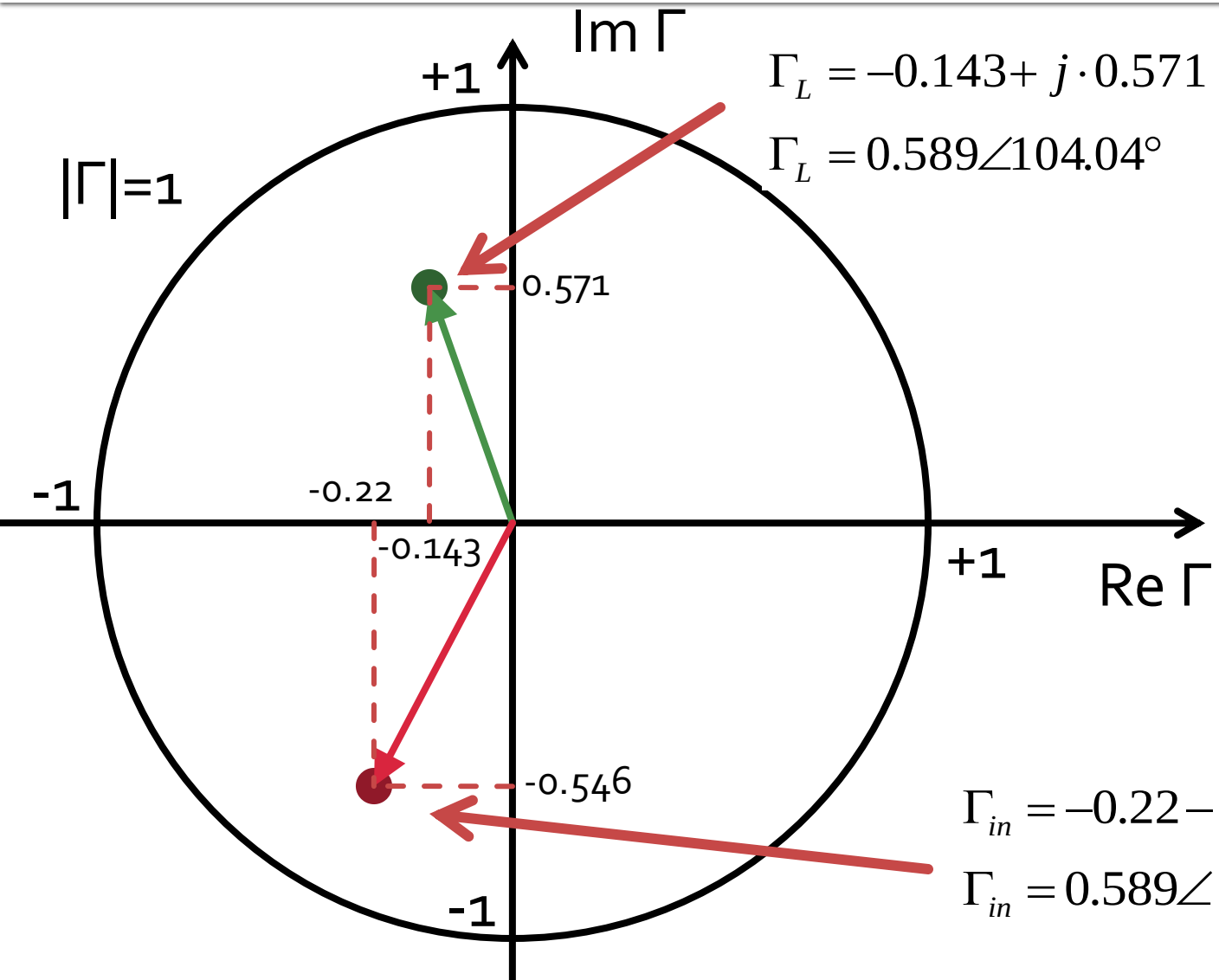

$$\Gamma_L = -0.143 + j \cdot 0.571$$

$$\Gamma_L = 0.589 \angle 104.04°$$

$$\Gamma_{in} = -0.22 - j \cdot 0.546$$

$$\Gamma_{in} = 0.589 \angle -111.96°$$

ADS, simulare

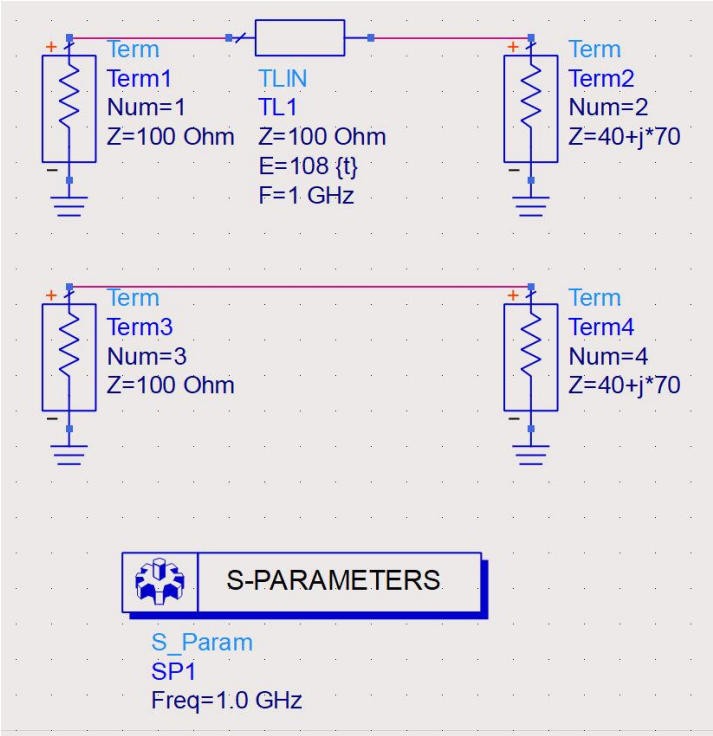

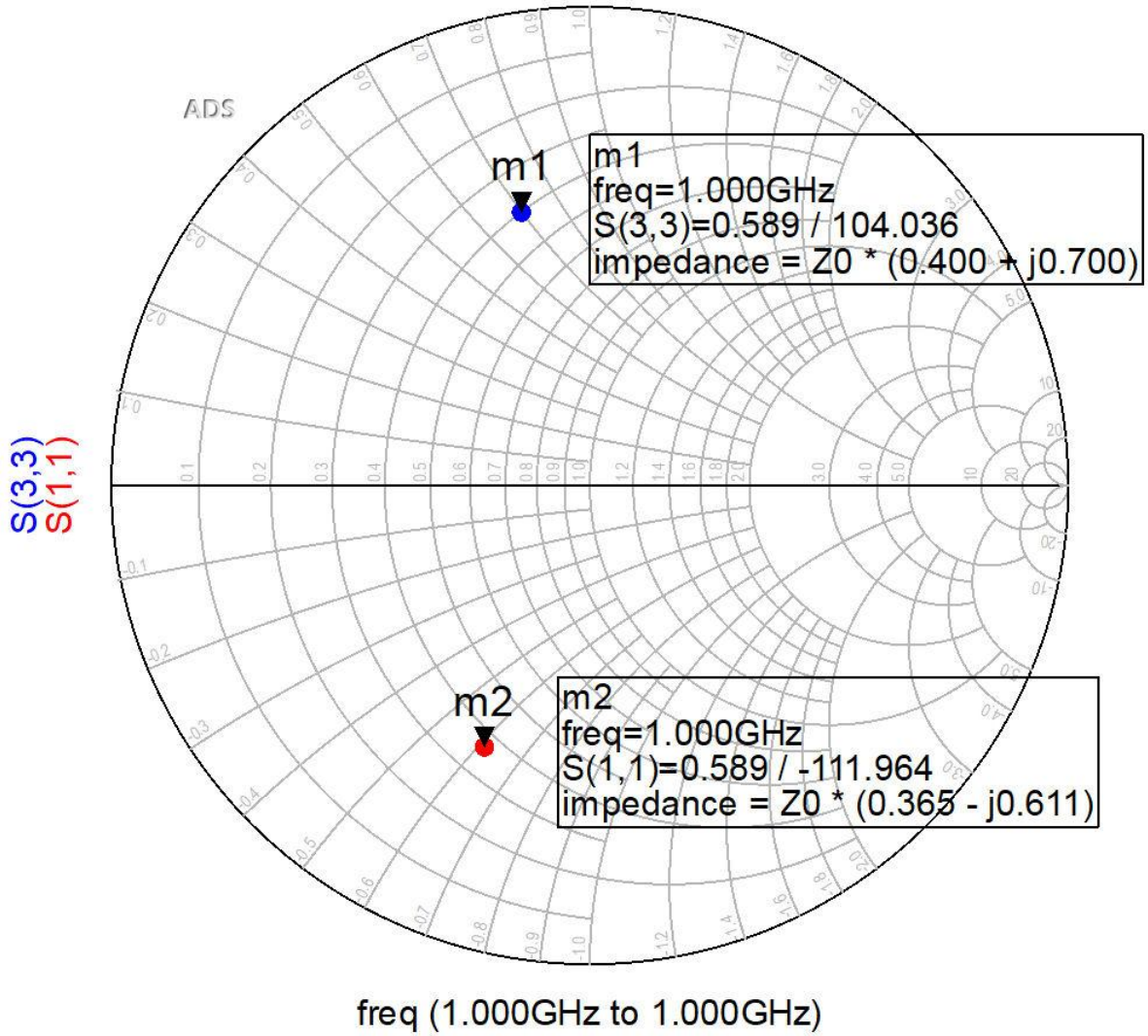

Contact

- Laboratorul de microunde si optoelectronica
- http://rf-opto.etti.tuiasi.ro
- rdamian@etti.tuiasi.ro